MASON-ADAM

STAINLESS STEEL and BRONZE BRAIDED HOSE

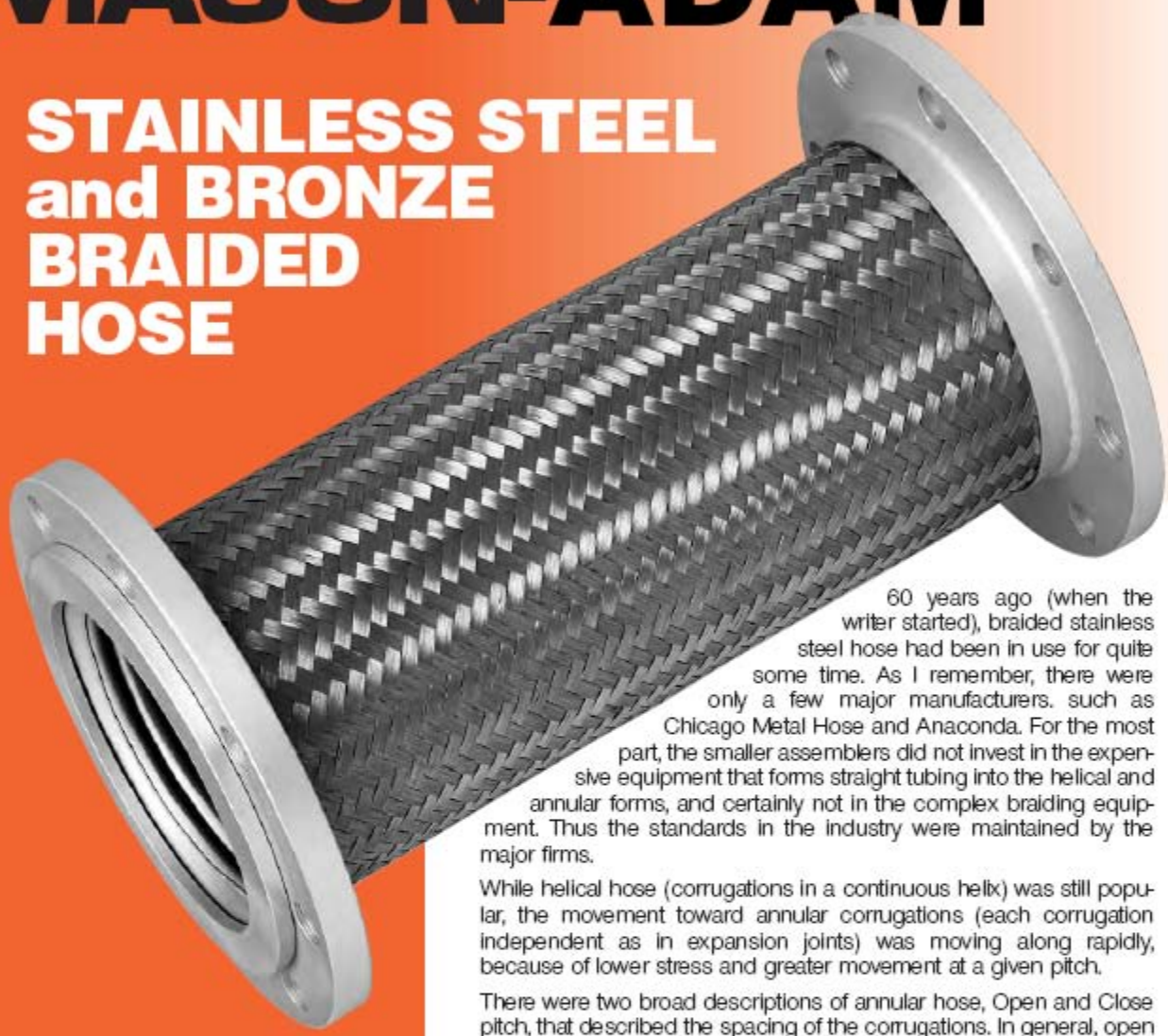

60 years ago (when the writer started), braided stainless steel hose had been in use for quite some time. As I remember, there were only a few major manufacturers. such as Chicago Metal Hose and Anaconda. For the most part, the smaller assemblers did not invest in the expensive equipment that forms straight tubing into the helical and annular forms, and certainly not in the complex braiding equipment. Thus the standards in the industry were maintained by the major firms.

While helical hose (corrugations in a continuous helix) was still popular, the movement toward annular corrugations (each corrugation independent as in expansion joints) was moving along rapidly, because of lower stress and greater movement at a given pitch.

There were two broad descriptions of annular hose, Open and Close pitch, that described the spacing of the corrugations. In general, open pitch was used in low pressure applications where the braid was not required, and the hose might be used to take up some axial expansion as in diesel exhaust.

Close pitched hose was always used for transverse movement and applications where the stainless steel braid was required to control thrust.

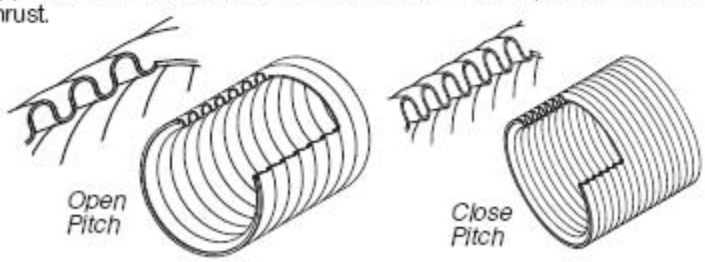

The corrugated hose provides flexibility and prevents leakage, but has virtually no resistance to pressure thrust. In a solid piping system, there is no external thrust, as the pressure on the projected area of the inside of the pipe is equalized by the two ends or bends in the pipe. The force is taken by the pipe wall. Once a flexible hose is inserted, that capability is gone.

FITTING OPTIONS

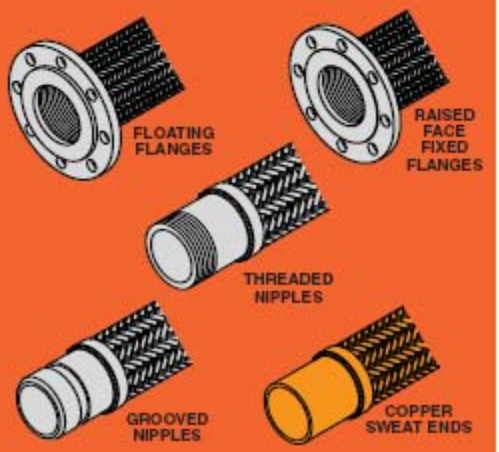

Bulletin BH-29-3.3

When fluid or gas pressure is applied to each corrugation, it tends to open axially, and this adds to the thrust of the pipe area multiplied by the line pressure. As the thrust pulls on the anchored braid ends, the interwoven bias weave applies inward radial pressure to the corrugations as well. Pressure capability is largely a function of the braid. When higher pressures are needed, it is seldom accomplished by thicker tubing as you would lose flexibility. It is most often accommodated by increasing the strength of the braid, using braid with heavier wire or tighter spacing described as Double or Triple Braid or just multiple braid layers. While braid angle is an influence, a quick comparison of braid strength is to multiply the wire area by the total number of wires around the circumference.

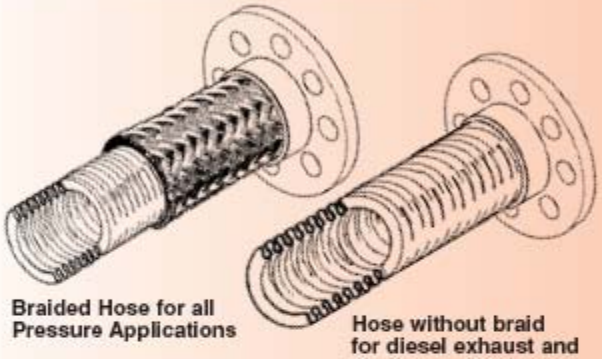

Braided Hose for all Pressure Applications

Hose without braid for diesel exhaust and similar applications

Since the braid is stretched taut by the pressure in the axial direction and kept that way, hoses cannot accept axial motion. All flexibility is at right angles to the axis, so the hose flexes transversely. Most machinery vibrates in a radial direction from the main shaft. Therefore, the hose should be installed parallel to the shaft for best performance, although it seldom is. It must be installed at a 90° angle to the motion in expansion applications. When major motion occurs in two planes, two hoses at right angles to each other are one way to solve the problem.

Horizontal & Parallel to Axis

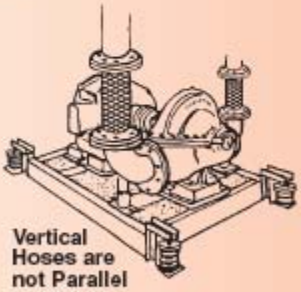

Vertical Hoses are not Parallel to Vibration Axis

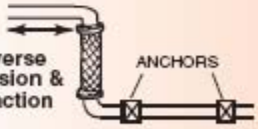

Transverse Expansion & Contraction

A metallic hose offers more bend resistance as the pressures increases. The term "flexible" means flexure without fatigue rather than easy flexure. In many applications the pipeline must be anchored right after the hose to force the hose to flex or the hose serves little purpose. For best results, one near the hose and the other some distance away provide a better solution, as pipe may pivot through one anchor. Spacing between anchors is a function of pipe diameter.

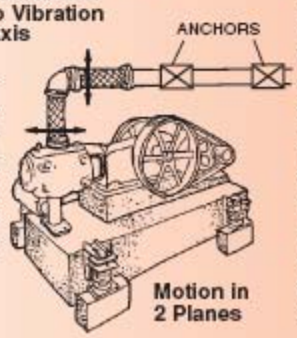

Motion in 2 Planes

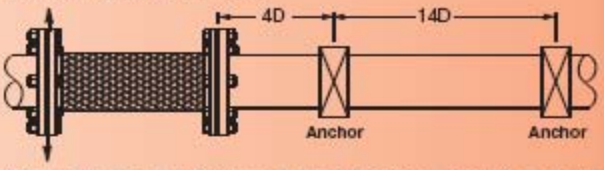

While we have influenced specifications over the years, our volume had always been very low, because we were not competitive. That has changed.

In setting standards for our new product range, we were dismayed to find that the term "Close Pitch" had almost become meaningless. Competitive literature does not include the number of corrugations per foot nor transverse stiffness. We are publishing pitch on all product pages and transverse stiffnesses on pages 5, 6, 7 & 8, so this bulletin begins to provide direction.

Do not be fooled by the salesman who bends a hose like a reed.

When most people visualize a hose flexing, the image is bending in an arc. Unfortunately, this is not true. When flanged hose is displaced, the rigid pipe flanges remain parallel. The hose remains relatively straight at both ends and takes an open "S" shape between the two ends, as shown below. Nippled hoses act the same way.

"S" Shaped Hose

Our hose has a safety factor of 4 times the rated pressure. When comparing allowable operating pressures with other manufacturers, ask for burst pressure. It may be they are working at a lower safety factor. We prefer not to.

All stainless steel hose loses strength at higher temperatures. In the interests of safety and good engineering, use the correction factors to lower ratings when lines are hot.

We arrived at our standards of corrugations per foot by buying samples from approximately six of the well known manufacturers. The variation was more than a factor of two. Our pitch matches the best of the competitors. Some other firms may have a tighter pitch, but our spacing ranks among the "quality suppliers" and makes the hose very flexible.

The question comes up as to why others do not use a tighter pitch. The answer is the fewer the corrugations, the shorter the length of the original tubing to arrive at a finished length, and the faster the forming process. This decreases cost in direct proportion to the shorter length of the original tubing. Flexibility suffers but the product is cheaper.

Our sales representatives already have a full sized photo comparing our braided copper sweat end hoses with a well known competitor's as shown below.

Our 4" live length is 68% longer than their 2 3/8". We stripped the braid and counted the corrugations. Their product, sold as "close pitched", had 5 active corrugations. We have 22 or 4.4 times as many.

That is why specifications and published information are so important. It is the end user's only protection.

For the past 50 years, we have based our vibration control mountings, hanger and pad recommendations on field experience. Rubber expansion joints have been tested acoustically and constantly improved for reliability. Since proper seismic restraint not only prevents property damage but more importantly saves lives, all of our seismic products are destruction tested for confirmation after design. We would not be living up to our self imposed standards without the same intense engineering attention to Stainless Steel Hose.

Based on visits to jobsites, we knew that very short hose lengths, the typical "plumbers helper", did nothing but possibly reduce misalignment stress. Holding both ends of the hose provided a sense of equal vibration with no reduction from one end to the other. Even double lengths seemed to act about the same way.

Experience always provides background for the next step. In machinery vibration control a theoretical isolator often failed to perform because the structure was not as stiff as the isolator. We solved the problem by producing isolators with lower stiffness than the structure.

We started this study by calculating transverse schedule 40 pipe stiffness. This is important as the hose faces this resistance.

There are many manuals that provide hose designs for misalignment, misalignment and vibration amplitude or straight connectors for vibration only. However, we could find no information on the force required to move a hose transversely— the key factor in selecting a hose to reduce vibration transmission.

Pipeline vibration reduction is based on hose length, pressure and the bending resistance of the steel piping it is attached to. While a vibration amplitude of ±1/8" would be unacceptably high, our study is based on that displacement as ±1/8" is the industries' "Pump Connector" standard. When comparing the stiffnesses of straight pipe lengths versus flexible hoses, if the flexible hose has a transverse stiffness greater than the pipe it is connected to, there is no reason why it would reduce vibration transmission. There is the influence of the system's inertia based on the mass provided by check and shutoff valves, strainers, etc., as well as the mass of the pipe filled with water directly after the flexible hose, but that is a variable. While it must help, it is an unknown.

11/2" x 9" Copper Fitted Hoses

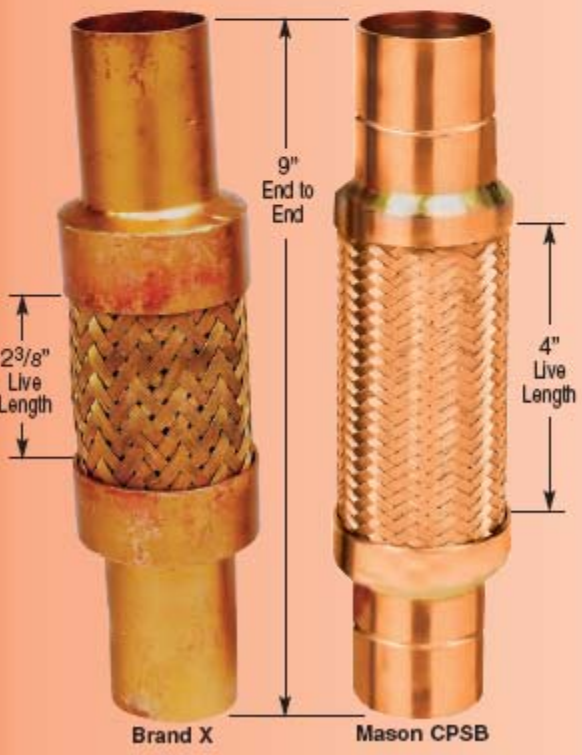

11/2" x 9" Cross Section of Copper Fitted Hoses (Braid Removed to Reveal Active Corrugations)

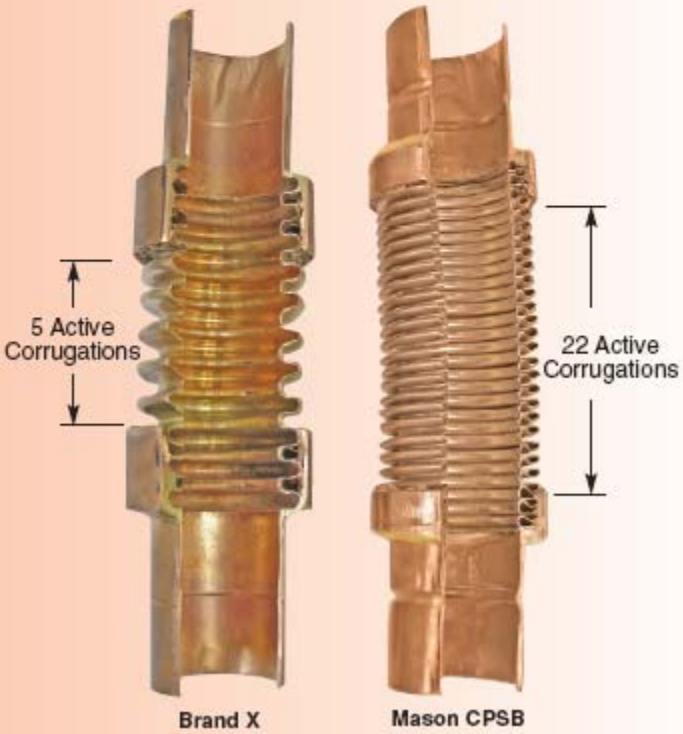

TEST DISCUSSION

Our in house capability does not include dynamic measurement. However, the following static data is the first publicized attempt to measure displacement forces as a basis for specifications. Despite recommendations to the contrary, the average pump installation has the hoses installed vertically.

The disturbing force is radial to the pump rotor. Since the hose is vertical, it is most effective when the unbalance is parallel to the floor and least when the force is vertical, as the hose is rigid in that direction. However, when the force is vertical, it is pushing or pulling the riser and in general, the riser and header are stiffer in that direction.

We continue to suggest two hoses at right angles to each other, or when only one hose is used, installed parallel to the axis of the pump, chiller, compressor, etc. While proper suggestions, we recognize piping restrictions often make it impossible.

The test results on pages 5 & 6 are the forces required to displace straight hose lengths 1/8" at three common pressures. These forces are compared to the resistance to 1/8" movement provided by 10', 8' and 6' lengths of schedule 40 Steel Pipe.

We used our computerized Baldwin Universal Tester so we could test two hoses in parallel to prevent machine distortion. Long lengths of pipes were bolted to the flanges at each end and guided through rigid rollers, so the flanges were held parallel as in the field. Water pressure was introduced by a hydraulic pump and measurements taken at 0, 50, 100, 150, 200 and 250psi. All readings were divided by 2 for single hose values. Since our hoses are all very close pitched and flexible, we believe competitive products would prove stiffer.

We tested a few hoses from the same lot and found variations. Therefore, our tabulations are only in the order of magnitude. We anticipated very large forces, but not as large as they turned out to be. Testing rig deflections lowered the 1/8" displacement values. 12" and larger data was not usable. 12", 14" and 16" numbers are extrapolations. We are rebuilding these jigs heavier and will publish corrected test information in the future. Similarly, very small sizes dropped below the testing machine's sensitivity, but they are in the proper direction.

We do not Recommend Industry Pump Connector Length.

Displacement Force is 3690 lbs./0.125" at 170 psi.

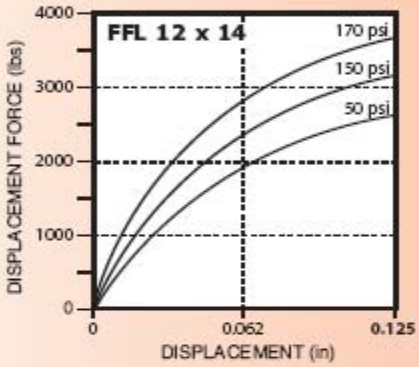

Typical Short Industry Pump Connector 12" x 14" at Maximum 0.125" Offset

We also do not recommend 12 x 24 length.

It is better than 12 x 14, but Displacement Force is still too high— 2650 lbs./0.125" at 170 psi.

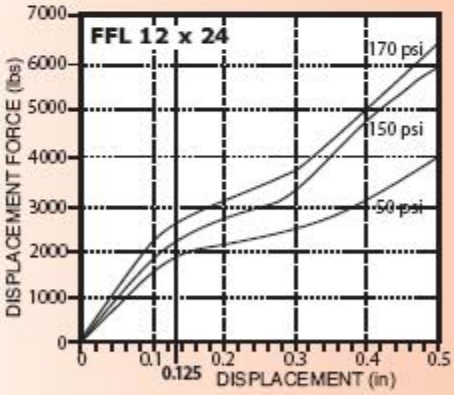

FFL 12 x 24 at 0.5" Offset

Recommended Length

Displacement Force drops to 1150 lbs./0.125" at 170 psi.

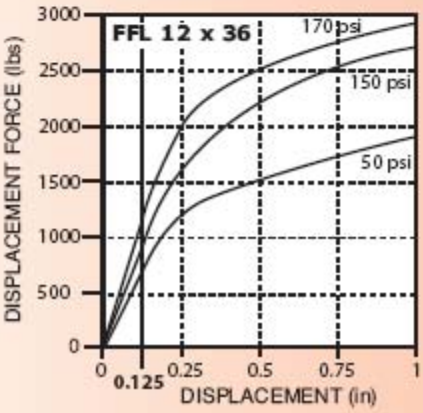

FFL 12 x 36 at 1" Offset

In addition to corrugation count and configuration, live length rather than overall length is the stiffness control. All of our tables include this information. We have kept nipples as short as possible to maximize the flexible hose portion, but notice that a 1/2" x 6 1/2" MN has only 2 3/4" of live length, 1 1/4" x 8 1/2" only 3 1/4", 4" x 12" only 5". That is why the forces needed to move these "Pump Connector" lengths are so excessive. The live hose is so short that the connector has difficulty or finds it impossible to assume the shape shown in the center photograph on page 4.

The lengths suggested in our specifications are based on experience. The height of equipment rooms controls the length of the risers. The pressure depends on the height of the building. It is hard to visualize 1/2" through 2" threaded hoses that would be connected to pumps or other equipment with long risers that go to the ceiling. They might not be connected to risers at all. Small lines seldom operate at more than 150psi, because they service low buildings. Therefore, we are suggesting overall 24" lengths at 150psi. These selections show the forces needed to flex the hose are all below the stiffness of the pipe. The vibrating energy of small sized equipment is also lower and minimizes risk of serious transmission problems.

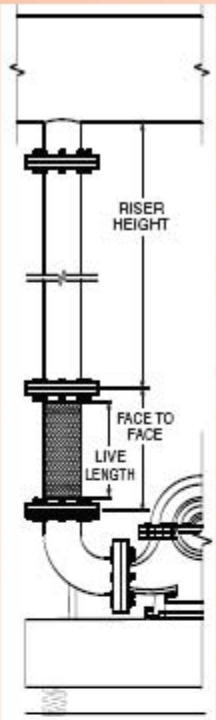

Typical vertical hose for purposes of illustration. Horizontal placement is preferable.

The same logic applies to the 2" through 4" sizes if we continue with the assumption that the pressure remains at 150psi. However, at 250psi, the hose stiffness increases dramatically. On virtually all major projects, the specifications allow for threaded nipples only through 2" diameter. So while we provide the force information for 2 1/2", 3" and 4" threaded nipple ends, our recommended lengths are based on flanged hoses in diameters of 2 1/2" and larger.

We have included copper pipe rather than ignoring it. However, copper tubing is both light and soft. Copper flexible hoses are better suited to allowing for thermal movement than reducing vibration.

Moving on to the larger diameter 2 1/2" through 16", we have to assume both higher pressures and longer risers. Typically a 4" pipe 8' long offers 90 lbs resistance to 1/8" movement. A 4" x 24" flanged hose at 150 psi has a resistance of 105 lbs., so it is too stiff. At 36" long, it drops to 50 lbs. and even at 250psi, 80 lbs., and still lower than the pipe stiffness. This sort of comparison is reasonable down through the study. A 36" FF length is about as long as practical because of valve heights and other problems. We are still synthesizing a great deal of information, so establishing one fixed length of 36" for 2 1/2" through 16" diameter appears to be a proper engineering choice at this time rather than an oversimplification.

BALDWIN TESTER REPORT ON FORCE REQUIRED TO DISPLACE 1/2" - 4" NIPPLED HOSES 1/8"
Information provided as a general guide to magnitude

THREADED NIPPLE HOSES (British Units)

MN Hose Dia. (in)	Length End to End (in)	Live Length (in)	Corrugations per foot	Force Required for 1/8" displacement (lbs) Hoses Water Pressure (psi) 50	150	250	Steel Pipe Schedule 40 Riser Length (feet) 6	8	10
1/2	6 1/2	2 3/4	92	6.0	14.0	20.0			
1/2	12	8 1/4	92	0.8	0.8	1.0	0.5	0.2	0.1
1/2	18	14 1/4	92	1.0	1.0	1.0	lbs	lbs	lbs
1/2	24	20 1/4	92	*0.3	0.4	0.5			
3/4	7	3 1/4	80	10.0	18.0	25.0			
3/4	12	8 1/4	80	1.5	2.5	3.8	1.1	0.5	0.2
3/4	18	14 1/4	80	0.4	2.0	4.0	lbs	lbs	lbs
3/4	24	20 1/4	80	* –	1.0	1.5			
1	8	3 3/4	72	13.0	30.0	50.0			
1	12	7 3/4	72	2.0	4.0	12.0	2.5	1.1	0.6
1	18	13 3/4	72	0.5	1.5	2.5	lbs	lbs	lbs
1	24	19 3/4	72	*0.5	1.0	1.5			
1 1/4	8 1/2	3 1/4	67	50	110	180			
1 1/4	12	6 3/4	67	3.5	15	20	6	2.4	1.2
1 1/4	18	12 3/4	67	1.5	4	6.5	lbs	lbs	lbs
1 1/4	24	18 3/4	67	–	2.5	3.5			
1 1/2	9	3 3/4	63	120	250	310			
1 1/2	12	6 3/4	63	20	60	105	9	4	2
1 1/2	18	12 3/4	63	5	15	23	lbs	lbs	lbs
1 1/2	24	18 3/4	63	3	6	8			
2	10 1/2	4 1/2	58	180	360	460			
2	12	6	58	120	265	400	20	8	4
2	18	12	58	20	60	90	lbs	lbs	lbs
2	24	18	58	6	15	23			
2 1/2	12	5	48	220	360	475	45	20	10
2 1/2	18	11	48	30	80	120	lbs	lbs	lbs
2 1/2	24	17	48	10	25	40			
3	12	5	46	350	600	750	90	35	20
3	18	11	46	100	190	250	lbs	lbs	lbs
3	24	17	46	35	70	110			
4	12	5	32	500	825	900	210	90	45
4	18	11	32	150	305	400	lbs	lbs	lbs
4	24	17	32	110	175	260			

*Adjusted for testing sensitivity.

THREADED NIPPLE HOSES (Metric Units)

MN Hose Dia. (mm)	Length End to End (mm)	Live Length (mm)	Corrugations per meter	Force Required for 3mm displacement (kg) Hoses Water Pressure (kg/cm²) 3.4	10.3	17.2	Steel Pipe Schedule 40 Riser Length (m) 1.8	2.4	3
15	165	70	302	2.7	6.4	9.1			
15	305	210	302	0.4	0.4	0.5	.23	.09	.05
15	457	362	302	0.5	0.5	0.5	kg	kg	kg
15	610	514	302	*0.1	0.2	0.2			
20	178	83	262	4.5	8.2	11.3			
20	305	210	262	0.7	1.1	1.7	0.5	0.2	0.1
20	457	362	262	0.2	0.9	1.8	kg	kg	kg
20	610	514	262	* –	0.5	0.7			
25	203	95	236	5.9	13.6	22.7			
25	305	197	236	0.9	1.8	5.4	1.1	0.5	0.3
25	457	349	236	0.2	0.7	1.1	kg	kg	kg
25	610	502	236	*0.2	0.5	0.7			
32	216	83	220	23	50	82			
32	305	171	220	2	7	9	2.7	1.0	0.5
32	457	234	220	1	2	3	kg	kg	kg
32	610	476	220	–	1	2			
40	229	95	207	54	113	141			
40	305	171	207	9	27	48	4	2	0.9
40	457	234	207	2	7	10	kg	kg	kg
40	610	476	207	1	3	4			
50	267	114	190	82	163	209			
50	305	152	190	54	120	181	9	4	2
50	457	305	190	9	27	41	kg	kg	kg
50	610	457	190	3	7	10			
65	305	127	157	100	163	216	20	9	4
65	457	279	157	14	36	54	kg	kg	kg
65	610	432	157	5	11	18			
75	305	127	151	159	272	340	40	17	9
75	457	279	151	45	86	113	kg	kg	kg
75	610	432	151	16	32	50			
100	305	127	105	227	374	408	96	40	21
100	457	279	105	68	138	181	kg	kg	kg
100	610	432	105	50	79	118			

BALDWIN TESTER REPORT ON FORCE REQUIRED TO DISPLACE 11/2" - 16" FLANGED HOSES 1/8"
Information provided as a general guide to magnitude

FLANGED END HOSES (British Units)

FFL Hose Dia. (in)	Length Face to Face (in)	Live Length (in)	Corrugations per foot	Force Required for 1/8" displacement (lbs) Hoses Water Pressure (psi) 50	150	250	Steel Pipe Schedule 40 Riser Length (feet) 6	8	10
11/2	9	6 7/8	63	20	55	85			
11/2	12	9 7/8	63	8	27	42	9 lbs	4 lbs	2 lbs
11/2	18	15 7/8	63	3	10	16			
11/2	24	21 7/8	63	2	6	6			
2	9	6 1/8	58	60	125	185			
2	12	9 1/8	58	22	57	95	20 lbs	8 lbs	4 lbs
2	18	15 1/8	58	6	18	29			
2	24	21 1/8	58	3	10	15			
21/2	9	6 1/8	48	145	275	380			
21/2	12	9 1/8	48	45	100	140	45 lbs	20 lbs	10 lbs
21/2	18	15 1/8	48	15	45	75			
21/2	24	21 1/8	48	7	25	35			
3	9	6 1/8	46	225	475	575			
3	12	9 1/8	46	105	245	320	90 lbs	35 lbs	20 lbs
3	18	15 1/8	46	30	105	130			
3	24	21 1/8	46	15	55	80			
3	*36	33 1/8	46	10	35	50			
				50	100	200			
4	9	6 1/8	32	490	620	700			
4	12	9 1/8	32	220	385	505	210 lbs	90 lbs	45 lbs
4	18	15 1/8	32	65	155	210			
4	24	21 1/8	32	40	105	155			
4	36	33 1/8	32	20	50	80			
5	12	8 7/8	29	440	650	750			
5	18	14 7/8	29	190	355	420	440 lbs	190 lbs	95 lbs
5	24	20 7/8	29	85	195	225			
5	36	32 7/8	29	65	135	150			
6	12	8 7/8	25	675	950	1050			
6	18	14 7/8	25	445	670	750	820 lbs	350 lbs	180 lbs
6	24	20 7/8	25	170	450	505			
6	36	32 7/8	25	70	155	180			
				50	150	180			
8	12	8 5/8	23	1200	1450	1680			
8	18	14 5/8	23	710	1250	1290	2110 lbs	890 lbs	455 lbs
8	24	20 5/8	23	325	750	850			
8	36	32 5/8	23	155	400	425			
				50	150	170			
10	13	9 5/8	21	1870	2200	2590			
10	18	14 5/8	21	1345	1580	1860	4690 lbs	1980 lbs	1010 lbs
10	24	20 5/8	21	900	1060	1250			
10	36	32 5/8	21	570	680	800			
12	*14	10 5/8	20	2670	3140	3690	8130 lbs	3430 lbs	1755 lbs
12	*24	20 5/8	20	1920	2250	2650			
12	*36	32 5/8	20	830	980	1150			
14	*14	10 5/8	18	3970	4675	5500	10900 lbs	4600 lbs	2300 lbs
14	*36	32 5/8	18	2370	2780	3270			
16	*16	12 5/8	16	5200	6120	7200	16400 lbs	6900 lbs	3500 lbs
16	*36	32 5/8	16	2860	3370	3960			

*Not tested. Best estimates.

FLANGED END HOSES (Metric Units)

FFL Hose Dia. (mm)	Length Face to Face (mm)	Live Length (mm)	Corrugations per meter	Force Required for 3mm displacement (kg) Hoses Water Pressure (kg/cm²) 3.4	10.3	17.2	Steel Pipe Schedule 40 Riser Length (m) 1.8	2.4	3
40	229	175	207	9	25	39			
40	305	251	207	4	12	19	4 kg	2 kg	1 kg
40	457	403	207	1	5	7			
40	607	556	207	1	2	2			
50	229	156	190	27	57	84			
50	305	232	190	10	26	43	9 kg	4 kg	2 kg
50	457	384	190	3	8	13			
50	610	537	190	1	5	7			
65	229	156	157	66	125	173			
65	305	232	157	20	45	64	21 kg	9 kg	5 kg
65	457	384	157	7	20	34			
65	610	537	157	3	11	16			
75	229	156	151	102	215	261			
75	305	232	151	48	111	145	40 kg	17 kg	9 kg
75	457	384	151	14	48	59			
75	610	537	151	7	25	36			
75	*914	841	151	5	16	23			
				3.4	6.9	13.8			
100	229	156	105	222	281	318			
100	305	232	105	100	175	229	96 kg	41 kg	21 kg
100	457	384	105	30	70	96			
100	610	537	105	18	48	70			
100	914	841	105	9	23	36			
125	305	225	95	200	295	340			
125	457	378	95	86	161	191	201 kg	85 kg	44 kg
125	610	530	95	39	89	102			
125	914	835	95	30	61	68			
150	305	225	82	306	431	476			
150	457	378	82	202	304	340	371 kg	157 kg	81 kg
150	610	530	82	76	204	229			
150	914	835	82	32	70	82			
				3.4	10.3	12.4			
200	305	219	75	544	658	760			
200	457	371	75	322	567	585	958 kg	405 kg	207 kg
200	610	524	75	147	340	386			
200	914	829	75	70	181	193			
				3.4	10.3	11.7			
250	330	244	69	848	998	1175			
250	457	371	69	610	717	844	2128 kg	898 kg	460 kg
250	610	524	69	408	481	567			
250	914	829	69	259	308	363			
300	*256	270	66	1211	1424	1674			
300	*610	524	66	871	1021	1202	3688 kg	1556 kg	797 kg
300	*914	829	66	376	445	522			
350	*256	270	59	1801	2121	2495	4930 kg	2080 kg	1065 kg
350	*914	829	59	1075	1261	1483			
400	*406	321	52	2359	2776	3266	7430 kg	3134 kg	1605 kg
400	*914	829	52	1297	1529	1796			

SPECIFICATION

Flexible stainless steel hoses with a safety factor of 4 shall be manufactured using type 304 stainless steel braided hose with one fixed and one floating raised face carbon steel plate flange. Sizes 21/2" (65mm) and smaller may have threaded nipples. Copper sweat ends, 4" (100mm) and smaller, may have SS (gas service) or Bronze (water service) bodies. Grooved ends may be used in sizes 2" (50mm) through 12" (300mm). Welding is not acceptable. Minimum lengths, minimum live lengths and minimum number of convolutions per foot to assure flexibility are as tabulated. Shorter lengths are not acceptable.

Hoses shall be installed on the equipment side of the shut off valves horizontal and parallel to the equipment shafts wherever possible.

Submittals shall include original test data showing force/displacement, fittings, material, live lengths, number of corrugations per foot and safety factor at pressure ratings. Hoses shall be type **BSS** or **CPSB** as manufactured by Mason Industries, Inc.

Pipe or Tubing Size (in)	FLANGED Face to Face (in)	Live Length (in)	THREADED End to End (in)	Live Length (in)	GROOVED End to End (in)	Live Length (in)	COPPER SWEAT BRONZE* End to End (in)	Live Length (in)	Min. Convolutions per (foot)
1/2	–	–	24	19 3/4	–	–	18	14 1/4	92
3/4	–	–	24	19 3/4	–	–	18	13 3/4	80
1	–	–	24	19 3/4	–	–	18	13 3/8	72
11/4	–	–	24	18 3/4	–	–	18	13 1/4	67
11/2	24	21 7/8	24	18 3/4	–	–	18	13	63
2	24	21 1/8	24	18	24	18	18	12 1/2	58
21/2	24	21 1/8	24	17	24	18	18	10 3/4	48
3	36	33 1/8	36	29	36	30	18	10 1/2	46
4	36	33 1/8	36	29	36	28	24	15 1/2	32
5	36	32 7/8	–	–	36	28	–	–	29
6	36	32 7/8	–	–	36	28	–	–	25
8	36	32 5/8	–	–	36	28	–	–	23
10	36	32 5/8	–	–	36	26	–	–	21
12	36	32 5/8	–	–	36	26	–	–	20
14	36	32 5/8	–	–	–	–	–	–	18
16	36	32 5/8	–	–	–	–	–	–	16

Pipe or Tubing Size (mm)	FLANGED Face to Face (mm)	Live Length (mm)	THREADED End to End (mm)	Live Length (mm)	GROOVED End to End (mm)	Live Length (mm)	COPPER SWEAT BRONZE* End to End (mm)	Live Length (mm)	Min. Convolutions per (meter)
15	–	–	610	502	–	–	457	362	302
20	–	–	610	502	–	–	457	349	262
25	–	–	610	502	–	–	457	340	236
30	–	–	610	476	–	–	457	337	220
40	610	556	610	476	–	–	457	330	207
50	610	537	610	457	610	457	457	318	190
65	610	537	610	432	610	457	457	273	157
75	914	841	914	737	914	762	457	267	151
100	914	841	914	737	914	711	457	394	105
125	914	835	–	–	914	711	–	–	95
150	914	835	–	–	914	711	–	–	82
200	914	829	–	–	914	711	–	–	75
250	914	829	–	–	914	660	–	–	69
300	914	829	–	–	914	660	–	–	66
350	914	829	–	–	–	–	–	–	59
400	914	829	–	–	–	–	–	–	52

*Sweat ends on bronze hose have not been tested. We believe copper lines are so ductile and light, hoses only allow for offset, so longer than Pump Connector lengths are justified, but very long lengths would be overkill.

PRODUCT TABLES

The following tables cover stock lengths. We describe capability in terms of allowable offset and normal vibration. Normal vibration is the amplitude you would expect at pump, chiller, air compressor connections, etc. These lengths do not describe what is needed for seismic motion on isolated machinery. We would be more than pleased to design to requirements for any special lengths, but the basic rule is the longer the length, the lower the transmitted vibration.

Of all fittings used with stainless steel hoses, the most common are two threaded ends or two flanges. Flexibility depends not on the overall length, but on the live length of hose between the braid rings. In terms of vibration transmission and allowable movement, flanged connectors of the same length are superior to nipple ends of one kind or another. The nipples are longer than the flanges are thick, and the same braid ring is used in both cases. So for a given length, flanged hose has longer live hose. It is important that you know the live length you are buying, so this information is included in all of our descriptive tables.

All ratings are extremely conservative. We sometimes allow more motion for a given length when we know specifics.

MN– *Braided Hose with Threaded Nipples*

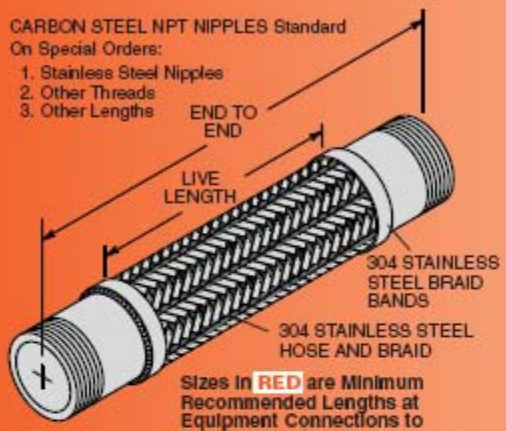

Sizes in RED are Minimum Recommended Lengths at Equipment Connections to Reduce Vibration Transmission. See discussion on pages 3 - 6.

Safety Factor is 4X Rated Pressure. Max. Vacuum— 30" Hg 762mm Hg

Our steam service ratings are very low in the interest of safety although our 70°F 21°C pressure ratings are as high or higher then our competitors. All locations where failure could lead to personal injury or suffocation must be avoided. In dangerous locations we suggest housed expansion joints, solid loops, ball joints, packed devices, etc. rather than thin walled flexible products regardless of manufacturer.

Consult factory with full location description as well as service conditions for higher pressure or temperature applications.

304 SS can be used up to 850°F 454°C in applications such as engine exhaust.

When using MN products in copper or brass water or steam systems, dielectric couplings must be used on each end to prevent leakage from galvanic action.

RATED PRESSURES @ ELEVATED TEMPERATURES (psi) (kg/cm²)

Hose Size (in)	(mm)	250°F 121°C Factor 0.92		350°F 176°C Factor 0.86		450°F 232°C Factor 0.81	
1/2	15	1010	71	950	60	890	62
3/4	20	640	44	600	42	570	40
1	25	530	37	500	35	470	33
1 1/4	32	440	31	410	29	390	27
1 1/2	40	410	28	385	27	365	25
2	50	330	23	310	21	290	20
2 1/2	65	270	19	250	17	235	16
3	80	260	18	240	16	230	16
4	100	205	14	190	13	180	12

SATURATED STEAM RECOMMENDED PRESSURE LIMITS

Size (in)	(mm)	Max Gauge (psi)	(kg/cm²)	Temp Reference (°F)	(°C)
1/2	15	200	14	387	197
3/4	20	200	14	387	197
1	25	150	10	362	183
1 1/4	32	150	10	362	183
1 1/2	40	150	10	362	183
2	50	150	10	362	183
2 1/2	65	125	8	355	179
3	80	125	8	355	179
4	100	125	8	355	179

STOCK SIZES and LENGTHS

MN DIMENSIONS AND PRESSURE RATINGS (British Units)

Type	Pipe Size & End to End† (in)	Live Length (in)	Corrugations per foot	Maximum Lateral Offset** (in)	Force Req'd for Max. Offset at 250psi or lower Rated Pressure (lbs)	Rated Pressure @ 70°F (psi)
MN	1/2 x 6 1/2*	2 1/4	92	1/8	20	1100
MN	1/2 x 12	7 3/4	92	1 1/4	9	1100
MN	1/2 x 18	13 3/4	92	2 1/2	7	1100
MN	1/2 x 24	19 3/4	92	3 1/2	6	1100
MN	3/4 x 7*	2 3/4	80	1/8	25	700
MN	3/4 x 12	7 3/4	80	1	12	700
MN	3/4 x 18	13 3/4	80	2 1/4	9	700
MN	3/4 x 24	19 3/4	80	3 1/4	8	700
MN	1 x 8*	3 3/4	72	1/8	50	580
MN	1 x 12	7 3/4	72	3/4	25	580
MN	1 x 18	13 3/4	72	2	9	580
MN	1 x 24	19 3/4	72	3	8	580
MN	1 1/4 x 8 1/2*	3 1/4	67	1/8	180	480
MN	1 1/4 x 12	6 3/4	67	5/8	35	480
MN	1 1/4 x 18	12 3/4	67	1 3/4	18	480
MN	1 1/4 x 24	18 3/4	67	2 3/4	13	480
MN	1 1/2 x 9*	3 3/4	63	1/8	310	450
MN	1 1/2 x 12	6 3/4	63	1/2	170	450
MN	1 1/2 x 18	12 3/4	63	1 1/2	110	450
MN	1 1/2 x 24	18 3/4	63	2 1/2	30	450
MN	2 x 10 1/2*	4 1/2	58	1/8	460	360
MN	2 x 12	6	58	1/4	225	360
MN	2 x 18	12	58	1 3/8	125	360
MN	2 x 24	18	58	2 3/8	60	360
MN	2 1/2 x 12*	5	48	1/8	475	290
MN	2 1/2 x 18	11	48	1 1/4	325	290
MN	2 1/2 x 24	17	48	2	160	290
MN	3 x 12*	5	46	1/8	750	280
MN	3 x 18	11	46	1	600	280
MN	3 x 24	17	46	1 3/4	390	280
MN	3 x 36	29	46	3 3/4	90	280
MN	4 x 12*	5	32	1/8	900	225
MN	4 x 18	11	32	1/2	800	225
MN	4 x 24	17	32	3/4	450	225
MN	4 x 36	29	32	3 1/4	200	225

MN DIMENSIONS AND PRESSURE RATINGS (Metric Units)

Type	Pipe Size & End to End† (mm)	Live Length (mm)	Corrugations per meter	Maximum Lateral Offset** (mm)	Force Req'd for Max. Offset at 17kg/cm² or lower Rated Pressure (kg)	Rated Pressure @21°C (kg/cm²)
MN	15 x 165*	57	302	3	9	77
MN	15 x 305	197	302	32	4	77
MN	15 x 457	349	302	63	3	77
MN	15 x 610	502	302	88	3	77
MN	20 x 178*	69	262	3	11	49
MN	20 x 305	197	262	25	5	49
MN	20 x 457	349	262	57	4	49
MN	20 x 610	502	262	82	3	49
MN	25 x 203*	95	236	3	23	40
MN	25 x 305	194	236	19	11	40
MN	25 x 457	349	236	50	4	40
MN	25 x 610	502	236	76	3	40
MN	32 x 216*	85	220	3	82	33
MN	32 x 305	171	220	15	16	33
MN	32 x 457	324	220	43	8	33
MN	32 x 610	476	220	69	6	33
MN	40 x 229*	95	207	3	141	31
MN	40 x 305	152	207	12	77	31
MN	40 x 457	305	207	38	50	31
MN	40 x 610	476	207	63	14	31
MN	50 x 267*	114	190	3	209	25
MN	50 x 305	152	190	6	102	25
MN	50 x 457	305	190	34	57	25
MN	50 x 610	457	190	60	27	25
MN	65 x 305*	127	157	3	215	20
MN	65 x 457	279	157	32	147	20
MN	65 x 610	432	157	50	73	20
MN	80 x 305*	127	151	3	340	19
MN	80 x 457	279	151	25	272	19
MN	80 x 610	432	151	43	177	19
MN	80 x 914	737	151	95	41	19
MN	100 x 305*	127	105	3	408	15
MN	100 x 457	279	105	12	363	15
MN	100 x 610	432	105	19	204	15
MN	100 x 914	737	105	82	91	15

*Industry Pump Connector Lengths are not recommended, but supplied on demand.
**Lateral Offset one side of centerline and normal machinery vibration. If intermittent in both directions, reduce by 50%.
†End to End Tolerance: Sizes 1/2" - 4" 15 - 100mm, ±1/4" 6mm

FFL– *Braided Hose with Carbon Steel Fixed & Floating Flanges*

FFL Braided Stainless Steel Hose has fixed and floating raised face flanges. Years ago, almost all stainless steel hose was manufactured with a floating flange on one end. It is still important because it makes lining up the holes easier during installation, and eliminates the possibility of twisting the hose, when the holes do not line up. Twisting contributes to early failure.

Raised face flanges seal better. Most competitive plate flanges have flat faces to reduce machining costs, but the raised face is the better product as sealing pressure increases by factors of 2 & 3 because of the reduced gasket area.

All of our stocked flanged hose has one floating flange.

Sizes in RED are Minimum Recommended Lengths at Equipment Connections to Reduce Vibration Transmission. See discussion on p.3 - 6.

For RATED PRESSURES @ ELEVATED TEMPERATURES and SATURATED STEAM RECOMMENDED PRESSURE LIMITS, see p.9.

Safety Factor is 4X Rated Pressure. Max. Vacuum— 30" Hg 762mm Hg

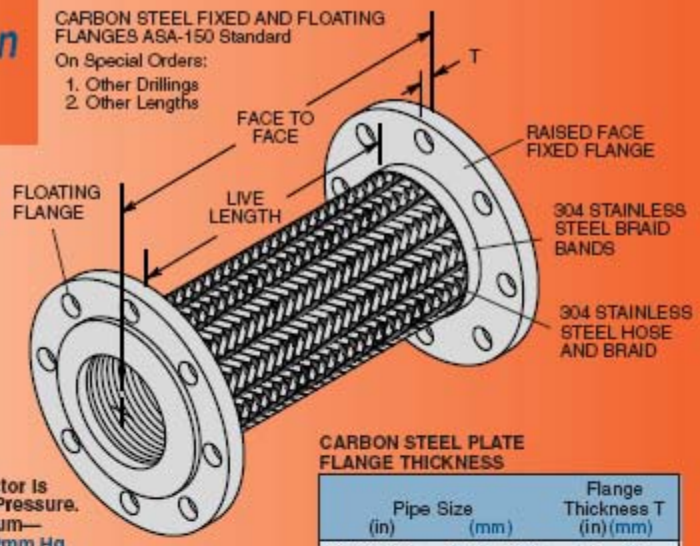

CARBON STEEL PLATE FLANGE THICKNESS

Pipe Size (in)	Pipe Size (mm)	Flange Thickness T (in)	Flange Thickness T (mm)
1 1/2 thru 4	40 thru 100	5/8	16
5 thru 6	125 thru 150	3/4	19
8 thru 16	200 thru 400	1	25

FFL DIMENSIONS AND PRESSURE RATINGS (British Units)

Type	Pipe Size & Face to Face† (in)	Live Length (in)	Corrugations per foot	Maximum Lateral Offset** (in)	Force Req'd for Max. Offset at 250psi or lower Rated Pressure (lbs)	Rated Pressure @70°F (psi)
FFL	1 1/2 X 9*	6 7/8	63	1/8	83	450
FFL	1 1/2 X 12	9 7/8	63	7/8	85	450
FFL	1 1/2 X 18	15 7/8	63	2	40	450
FFL	1 1/2 X 24	21 7/8	63	2 3/4	30	450
FFL	2 X 9*	6 1/8	58	1/8	185	360
FFL	2 X 12	9 1/8	58	3/4	180	360
FFL	2 X 18	15 1/8	58	1 3/4	80	360
FFL	2 X 24	21 1/8	58	2 1/2	45	360
FFL	2 1/2 X 9*	6 1/8	48	1/8	380	290
FFL	2 1/2 X 12	9 1/8	48	5/8	345	290
FFL	2 1/2 X 18	15 1/8	48	1 1/2	215	290
FFL	2 1/2 X 24	21 1/8	48	2 1/4	110	290
FFL	3 X 9*	6 1/8	46	1/8	575	280
FFL	3 X 12	9 1/8	46	1/2	770	280
FFL	3 X 18	15 1/8	46	1 1/4	335	280
FFL	3 X 24	21 1/8	46	2	205	280
FFL	3 X 36	33 1/8	46	4	100 ***	280
FFL	4 X 9*	6 1/8	32	1/8	700	225
FFL	4 X 12	9 1/8	32	3/8	1155	225
FFL	4 X 18	15 1/8	32	3/4	525	225
FFL	4 X 24	21 1/8	32	1 3/4	485	225
FFL	4 X 36	33 1/8	32	3 1/2	220 ***	225
FFL	5 X 12*	8 7/8	29	1/8	750	200
FFL	5 X 18	14 7/8	29	5/8	710	200
FFL	5 X 24	20 7/8	29	1 1/2	575	200
FFL	5 X 36	32 7/8	29	3	430	200
FFL	6 X 12*	8 7/8	25	1/8	1050	200
FFL	6 X 18	14 7/8	25	1/2	2175	200
FFL	6 X 24	20 7/8	25	1 1/4	1485	200
FFL	6 X 36	32 7/8	25	2 3/4	620	200
FFL	8 X 12*	8 5/8	23	1/8	1680	180
FFL	8 X 18	14 5/8	23	3/8	3280	180
FFL	8 X 24	20 5/8	23	1	3180	180
FFL	8 X 36	32 5/8	23	2	1405	180
FFL	10 X 13*	9 5/8	21	1/8	2590	170
FFL	10 X 18	14 5/8	21	1/4	3750	170
FFL	10 X 24	20 5/8	21	3/4	4020	170
FFL	10 X 36	32 5/8	21	1 1/2	2230	170
FFL	12 X 14*	10 5/8	20	1/8	3690	170'
FFL	12 X 24	20 5/8	20	1/2	4950	170'
FFL	12 X 36	32 5/8	20	1	2960	170'
FFL	14 X 14*	10 5/8	18	1/8	5500	170'
FFL	14 X 36	32 5/8	18	1	12000	170'
FFL	16 X 16*	12 5/8	16	1/8	7200	170'
FFL	16 X 36	32 5/8	16	3/4	15000	170'

FFL DIMENSIONS AND PRESSURE RATINGS (Metric Units)

Type	Pipe Size & Face to Face† (mm)	Live Length (mm)	Corrugations per meter	Maximum Lateral Offset** (mm)	Force Req'd for Max. Offset at 17kg/cm² or lower Rated Pressure (kg)	Rated Pressure @21°C (kg/cm²)
FFL	40 X 229*	175	207	3	38	31
FFL	40 X 305	251	207	22	39	31
FFL	40 X 457	403	207	50	18	31
FFL	40 X 610	556	207	69	14	31
FFL	50 X 229*	156	190	3	84	25
FFL	50 X 305	232	190	19	82	25
FFL	50 X 457	403	190	44	36	25
FFL	50 X 610	537	190	63	20	25
FFL	65 X 229*	156	157	3	171	20
FFL	65 X 305	232	157	15	156	20
FFL	65 X 457	403	157	38	98	20
FFL	65 X 610	537	157	57	50	20
FFL	80 X 229*	156	151	3	259	19
FFL	80 X 305	232	151	13	349	19
FFL	80 X 457	403	151	32	152	19
FFL	80 X 610	537	151	50	93	19
FFL	80 X 914	841	151	101	45 ***	19
FFL	100 X 229*	156	105	3	319	15
FFL	100 X 305	232	105	10	524	15
FFL	100 X 457	403	105	19	238	15
FFL	100 X 610	537	105	43	220	15
FFL	100 X 914	841	105	88	100 ***	15
FFL	125 X 305*	225	95	3	340	14
FFL	125 X 457	378	95	15	322	14
FFL	125 X 610	530	95	38	261	14
FFL	125 X 914	835	95	76	195	14
FFL	150 X 305*	225	82	3	476	14
FFL	150 X 457	371	82	12	987	14
FFL	150 X 610	524	82	32	674	14
FFL	150 X 914	829	82	69	281	14
FFL	200 X 305*	219	75	3	762	12
FFL	200 X 457	371	75	9	1488	12
FFL	200 X 610	524	75	25	1442	12
FFL	200 X 914	829	75	50	637	12
FFL	250 X 330*	244	69	3	1175	11
FFL	250 X 457	371	69	6	1701	11
FFL	250 X 610	524	69	19	1823	11
FFL	250 X 914	829	69	38	1012	11
FFL	300 X 356*	270	66	3	1674	11'
FFL	300 X 610	524	66	12	2245	11'
FFL	300 X 914	829	66	25	1343	11'
FFL	350 X 356*	270	59	3	2495	11'
FFL	350 X 914	829	59	25	5443	11'
FFL	400 X 406*	321	52	3	3266	11'
FFL	400 X 914	829	52	19	6804	11'

*Industry Pump Connector Lengths are not recommended, but supplied on demand. 'Size 12" thru 16" 300-400mm have double braid.
**Lateral Offset one side of centerline and normal machinery vibration. If intermittent in both directions, reduce by 50%. ***Estimated.
†Face to Face Tolerances: Sizes 1/4" - 4" 15 - 100mm, ±1/4" 6mm; 5" - 8" 125 - 200mm, ±3/8" 9mm; 10" 250mm and larger, ±1/2" 13mm.

FFLSS– *Braided Hose with Stainless Steel Fixed & Floating Flanges*

STAINLESS STEEL FIXED AND FLOATING FLANGES ASA-150 Drilling Standard

On Special Orders:
1. Other Drillings
2. Other Lengths

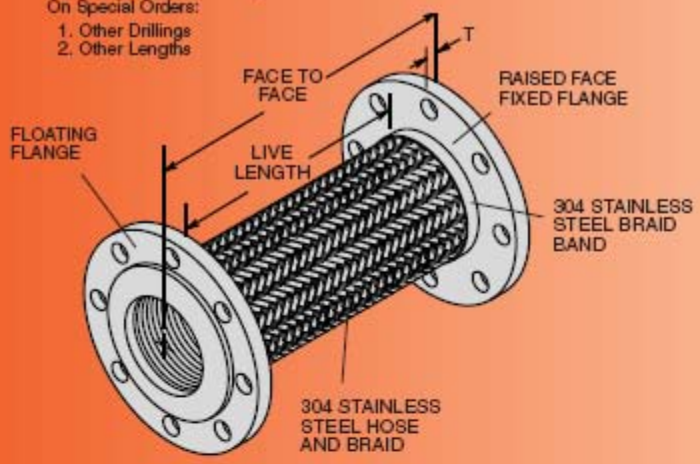

STAINLESS STEEL PLATE FLANGE THICKNESS

Pipe Size (in)	Pipe Size (mm)	Flange Thickness T (in)	Flange Thickness T (mm)
1 1/2 thru 4	40 thru 100	5/8	16
5 thru 6	125 thru 150	3/4	19
8 thru 12	200 thru 300	1	25

Safety Factor Is 4X Rated Pressure.
Max. Vacuum— 30" Hg 762mm Hg

STOCK SIZES and LENGTHS

FFLSS DIMENSIONS AND PRESSURE RATINGS (British Units)

Type	Pipe Size & Face to Face† (in)	Live Length (in)	Corrugations per foot	Maximum Permanent Lateral Offset** (in)	Rated Pressure @70°F (psi)
FFLSS	2 X 12	9 1/8	58	3/4	360
FFLSS	2 1/2 X 12	9 1/8	48	5/8	290
FFLSS	3 X 12	9 1/8	46	1/2	280
FFLSS	4 X 18	14 7/8	32	3/4	225
FFLSS	5 X 18	14 7/8	29	5/8	200
FFLSS	6 X 18	14 7/8	25	1/2	200
FFLSS	8 X 24	19 7/8	23	1	200
FFLSS	10 X 24	19 7/8	21	3/4	170
FFLSS	12 X 24	19 7/8	20	1/2	170‡

FFLSS DIMENSIONS AND PRESSURE RATINGS (Metric Units)

Type	Pipe Size & Face to Face† (mm)	Live Length (mm)	Corrugations per meter	Maximum Permanent Lateral Offset** (mm)	Rated Pressure @21°C (kg/cm²)
FFLSS	50 X 305	232	190	19	25
FFLSS	65 X 305	232	157	15	20
FFLSS	80 X 305	232	151	12	19
FFLSS	100 X 457	378	105	19	15
FFLSS	125 X 457	378	95	15	14
FFLSS	150 X 457	378	82	12	14
FFLSS	200 X 610	505	75	25	14
FFLSS	250 X 610	505	69	19	11
FFLSS	300 X 610	505	66	12	11‡

*Lateral Offset one side of centerline and normal machinery vibration. If intermittent in both directions, reduce by 50%.
†Minimum Burst is four times the Rated Pressure. ‡Size 12" 300mm has double braid.

NOTE: In applications calling for stainless flanges and meeting special overall vibration reduction lengths, order to specified lengths.

Rated Pressure @ Elevated Temperatures for FFL and FFLSS

RATED PRESSURES @ ELEVATED TEMPERATURES (psi) (kg/cm²)

Hose Size (in)	Hose Size (mm)	250°F 121°C Factor 0.92		350°F 176°C Factor 0.86		450°F 232°C Factor 0.81	
1 1/2	40	410	28	385	27	365	25
2	50	330	23	310	21	290	20
2 1/2	65	270	19	250	17	235	16
3	80	260	18	240	16	230	16
4	100	205	14	190	13	180	12
5	125	190	13	180	12	170	11
6	150	190	13	180	12	170	11
8	200	180	12	170	11	160	11
10	250	160	11	150	10	140	9
12	300	160	11	150	10	140	9
14	350	140	9	130	9	120	8
16	400	130	9	120	8	110	7

SATURATED STEAM RECOMMENDED PRESSURE LIMITS

Size (in)	Size (mm)	Max Gauge (psi)	Max Gauge (kg/cm²)	Temp Reference (°F)	Temp Reference (°C)
1 1/2	40	150	10	362	183
2	50	150	10	362	183
2 1/2	65	125	8	355	179
3	80	125	8	355	179
4	100	125	8	355	179
5	125	100	7	337	169
6	150	100	7	337	169
8	200	100	7	337	169
10	250	60	4	307	153
12	300	60	4	307	153
14	350	60	4	307	153
16	400	60	4	307	153

Our steam service ratings are very low in the interest of safety although our 70°F 21°C pressure ratings are as high or higher than our competitors. All locations where failure could lead to personal injury or suffocation must be avoided. In dangerous locations we suggest housed expansion joints, solid loops, ball joints, packed devices, etc. rather than thin walled flexible products regardless of manufacturer.

Consult factory with full location description as well as service conditions for higher pressure or temperature applications.

304 SS can be used up to 850°F 454°C in applications such as engine exhaust with minor pressure.

When using FFL(SS) products in copper or brass water or steam systems, dielectric flanges must be used on each end to prevent leakage from galvanic action.

FFL2B300– *Double Braided Hose with 300 ASA Flanges*

CARBON STEEL FIXED AND FLOATING FLANGES ASA-300 Standard

On Special Orders:
1. Stainless Steel Flanges
2. Other Lengths

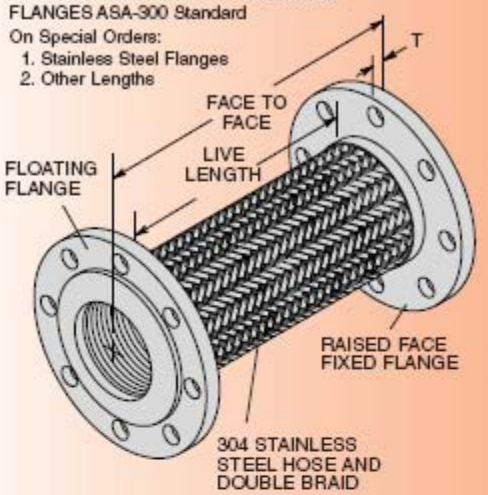

RATED PRESSURES @ ELEVATED TEMPERATURES (psi)(kg/cm²)

Hose Size (in)	(mm)	250°F 121°C Factor 0.92		350°F 176°C Factor 0.86		450°F 232°C Factor 0.81	
2	50	460	31	430	29	405	28
21/2	65	460	31	430	29	405	28
3	80	345	24	323	22	304	21
4	100	345	24	323	22	304	21
5	125	345	24	323	22	304	21
6	150	345	24	323	22	304	21
8	200	216	15	202	14	190	13
10	250	193	13	181	12	170	11
12	300	156	11	146	10	138	9

SATURATED STEAM RECOMMENDED PRESSURE LIMITS

Size (in)	(mm)	Max Gauge (psi)	(kg/cm²)	Temp Reference (°F)	(°C)
2	50	200	14	388	198
21/2	65	150	10	362	183
3	80	150	10	362	183
4	100	150	10	362	183
5	125	125	9	355	179
6	150	125	9	355	179
8	200	90	6	330	166
10	250	75	5	307	153
12	300	60	4	307	153

Our steam service ratings are very low in the interest of safety although our 70°F 21°C pressure ratings are as high or higher then our competitors. All locations where failure could lead to personal injury or suffocation must be avoided. In dangerous locations we suggest housed expansion joints, solid loops, ball joints, packed devices, etc. rather than thin walled flexible products regardless of manufacturer.

Consult factory with full location description as well as service conditions for higher pressure or temperature applications.

304 SS can be used up to 850°F 454°C in applications such as engine exhaust with minor pressure.

When using FFL2B300 products in copper or brass water or steam systems, dielectric flanges must be used on each end to prevent leakage from galvanic action.

CARBON STEEL PLATE FLANGE THICKNESS

Pipe Size (in)	(mm)	Flange Thickness T (in)	(mm)
2 thru 4	50 thru 100	3/4	19
5 thru 6	125 thru 150	1	25
8 thru 12	200 thru 300	11/4	32

*Lateral Offset one side of centerline and normal machinery vibration. If intermittent in both directions, reduce by 50%.

†Face to Face Tolerances:
Sizes 2" - 4" 50 - 100mm, ±1/4" 6mm;
Sizes 5" - 6" 125 - 150mm, ±3/8" 9mm;
Sizes 10"+ 250mm, ±1/2" 13mm

STOCK SIZES and LENGTHS

Safety Factor Is 4X Rated Pressure.
Max. Vacuum— 30" Hg 762mm Hg

FFL2B300 DIMENSIONS AND PRESSURE RATINGS (British Units)

Pipe Size & Face to Face† (in)	Live Length (in)	Corrugations per foot	Maximum Permanent Lateral Offset* (in)	Rated Pressure @70°F (psi)
2 X 12	91/8	58	3/4	500
21/2 X 12	91/8	48	5/8	500
3 X 12	91/8	46	1/2	375
4 X 18	147/8	32	3/4	375
5 X 18	147/8	29	5/8	375
6 X 18	147/8	25	1/2	375
8 X 24	197/8	23	1	235
10 X 24	197/8	21	3/4	210
12 X 24	197/8	20	1/2	170

FFL2B300 DIMENSIONS AND PRESSURE RATINGS (Metric Units)

Pipe Size & Face to Face† (mm)	Live Length (mm)	Corrugations per meter	Maximum Permanent Lateral Offset* (mm)	Rated Pressure @21°C (kg/cm²)
50 X 305	232	190	19	35
65 X 305	232	157	15	35
80 X 305	232	151	12	26
100 X 457	378	105	19	26
125 X 457	378	95	15	26
150 X 457	378	82	12	26
200 X 610	505	75	25	16
250 X 610	505	69	19	14
300 X 610	505	66	12	11

RFFL– *Reducer with Fixed & Floating Flanges*

CARBON STEEL FIXED AND FLOATING FLANGES ASA-150 Standard

On Special Orders:
1. Stainless Steel Flanges
2. Other Drillings
3. Other Lengths
4. Other Reductions

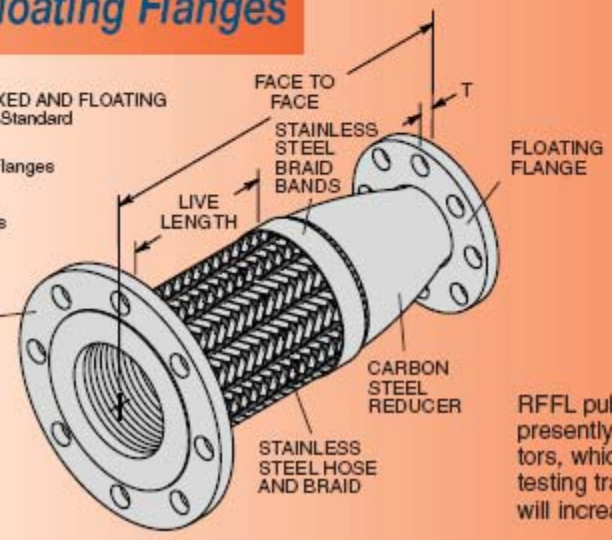

FOR RATED PRESSURES @ ELEVATED TEMPERATURES and SATURATED STEAM RECOMMENDED PRESSURE LIMITS see page 11

RFFL published lengths are based on live lengths presently the industry standard for pump connectors, which we feel are too short. We are physically testing transverse stiffness and in the near future will increase live lengths based on our research.

STOCK SIZES and LENGTHS

RFFL DIMENSIONS AND PRESSURE RATINGS (British Units)

Type	Pipe Sizes– Large End X Small End (in)	Face to Face† (in)	Live Length (in)	Corru-gations per foot	Maximum Permanent Lateral Offset** (in)	Rated Pressure @70°F (psi)
RFFL	21/2 X 2	14	65/8	48	1/8	290
RFFL	3 X 2	14	65/8	46	1/8	280
RFFL	3 X 21/2	14	65/8	46	1/8	280
RFFL	4 X 2	14	71/8	32	1/8	225
RFFL	4 X 21/2	14	71/8	32	1/8	225
RFFL	4 X 3	14	71/8	32	1/8	225
RFFL	5 X 3	17	87/8	29	1/8	200
RFFL	5 X 4	17	87/8	29	1/8	200
RFFL	6 X 3	18	93/8	25	1/8	200
RFFL	6 X 4	18	93/8	25	1/8	200
RFFL	6 X 5	18	93/8	25	1/8	200
RFFL	8 X 4	18	85/8	23	1/8	180
RFFL	8 X 5	18	85/8	23	1/8	180
RFFL	8 X 6	18	85/8	23	1/8	180
RFFL	10 X 6	20	95/8	21	1/8	170
RFFL	10 X 8	20	95/8	21	1/8	170
RFFL	12 X 10	22	105/8	20	1/8	170†

RFFL DIMENSIONS AND PRESSURE RATINGS (Metric Units)

Type	Pipe Sizes– Large End X Small End† (mm)	Face to Face (mm)	Live Length (mm)	Corru-gations per meter	Maximum Permanent Lateral Offset** (mm)	Rated Pressure @21°C (kg/cm²)
RFFL	65 X 51	356	168	157	3	20
RFFL	80 X 51	356	168	151	3	19
RFFL	80 X 64	356	168	151	3	19
RFFL	100 X 51	356	181	105	3	15
RFFL	100 X 64	356	181	105	3	15
RFFL	100 X 76	356	181	105	3	15
RFFL	125 X 76	432	225	95	3	14
RFFL	125 X 102	432	225	95	3	14
RFFL	150 X 76	475	238	82	3	14
RFFL	150 X 102	475	238	82	3	14
RFFL	150 X 127	475	238	82	3	14
RFFL	200 X 102	475	219	75	3	12
RFFL	200 X 127	475	219	75	3	12
RFFL	200 X 152	475	219	75	3	12
RFFL	250 X 152	508	244	69	3	11
RFFL	250 X 203	508	244	69	3	11
RFFL	300 X 254	559	270	69	3	11†

**Lateral Offset one side of centerline and normal machinery vibration. If intermittent in both directions, reduce by 50%.
†Large End to Small End Tolerances: Sizes 2" - 4" 50 - 100mm, ±1/4" 6mm; Sizes 5" - 8" 125 - 200mm, ±3/8" 9mm; Sizes 10" 250mm and larger, ±1/2" 13mm. †Size 12" 300mm has double braid.

GNF– *Braided Hose with Grooved Nipple and Flange*

CARBON STEEL FIXED FLANGE
ASA-150 Standard
On Special Orders:
1. Stainless Steel Flange
2. Other Drillings
3. Other Lengths

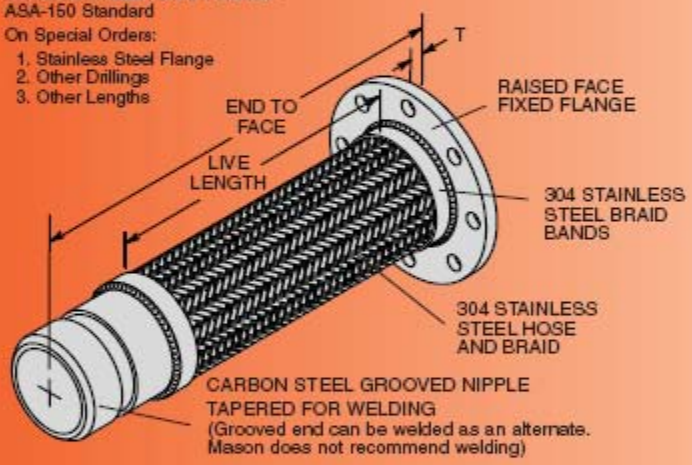

Safety Factor Is 4X Rated Pressure.
Max. Vacuum— 30" Hg 762mm Hg

**Lateral Offset one side of centerline and normal machinery vibration. If intermittent in both directions, reduce by 50%.

†End to Face Tolerances: Sizes 2" - 4" 50 - 100mm, ±1/4" 6mm; Sizes 5" - 8" 125 - 200mm, ±3/8" 9mm; Sizes 10" 250mm and larger, ±1/2" 13mm.

†Size 12" 300mm has double braid.

STOCK SIZES and LENGTHS

GNF DIMENSIONS AND PRESSURE RATINGS (British Units)

Type	Pipe Size & End to Face† (in)	Live Length (in)	Corru-gations per foot	Maximum Permanent Lateral Offset**(in)	Rated Pressure @70°F (psi)
GNF	2 x 13	83/8	58	1/4	360
GNF	21/2 x 13	83/8	48	1/4	290
GNF	3 x 13	83/8	46	1/4	280
GNF	4 x 16	103/8	32	1/4	225
GNF	5 x 18	121/4	29	1/4	200
GNF	6 x 20	141/4	25	1/4	200
GNF	8 x 22	16	23	1/4	180
GNF	10 x 25	18	21	1/4	170
GNF	12 x 27	20	20	1/4	170†

GNF DIMENSIONS AND PRESSURE RATINGS (Metric Units)

Type	Pipe Size & End to Face† (mm)	Live Length (mm)	Corru-gations per meter	Maximum Permanent Lateral Offset**(mm)	Rated Pressure @21°C (kg/cm²)
GNF	50 x 330	213	190	6	25
GNF	65 x 330	213	157	6	20
GNF	75 x 330	213	151	6	19
GNF	100 x 406	264	105	6	15
GNF	125 x 457	311	95	6	14
GNF	150 x 508	362	82	6	14
GNF	200 x 559	406	75	6	12
GNF	250 x 635	457	69	6	11
GNF	300 x 686	508	69	6	11†

Rated Pressure @ Elevated Temperatures for RFFL, GNF and GN

RATED PRESSURES @ ELEVATED TEMPERATURES (psi) (kg/cm²)

Hose Size (in)	(mm)	250°F 121°C Factor 0.92		350°F 176°C Factor 0.86		450°F 232°C Factor 0.81	
2	50	330	23	310	21	290	20
21/2	65	270	19	250	17	235	16
3	80	260	18	240	16	230	16
4	100	210	15	200	14	190	13
5	125	190	13	180	12	170	11
6	150	190	13	180	12	170	11
8	200	170	11	160	11	150	10
10	250	160	11	150	10	140	9
12	300	160	11	150	10	140	9

SATURATED STEAM RECOMMENDED PRESSURE LIMITS

Size (in)	(mm)	Max Gauge (psi)	(kg/cm²)	Temp Reference (°F)	(°C)
2	50	150	11	362	183
21/2	65	125	9	355	179
3	80	125	9	355	179
4	100	125	9	355	179
5	125	100	7	337	169
6	150	100	7	337	169
8	200	75	5	320	160
10	250	60	4	307	153
12	300	60	4	307	153

Our steam service ratings are very low in the interest of safety although our 70°F 21°C pressure ratings are as high or higher than our competitors. All locations where failure could lead to personal injury or suffocation must be avoided. In dangerous locations we suggest housed expansion joints, solid loops, ball joints, packed devices, etc. rather than thin walled flexible products regardless of manufacturer.

Consult factory with full location description as well as service conditions for higher pressure or temperature applications.

304 SS can be used up to 850°F 454°C in applications such as engine exhaust with minor pressure.

When using RFFL, GNF or GN products in copper or brass water or steam systems, dielectric flanges and/or couplings must be used on each end to prevent leakage from galvanic action.

GN– *Braided Hose with Grooved Nipples*

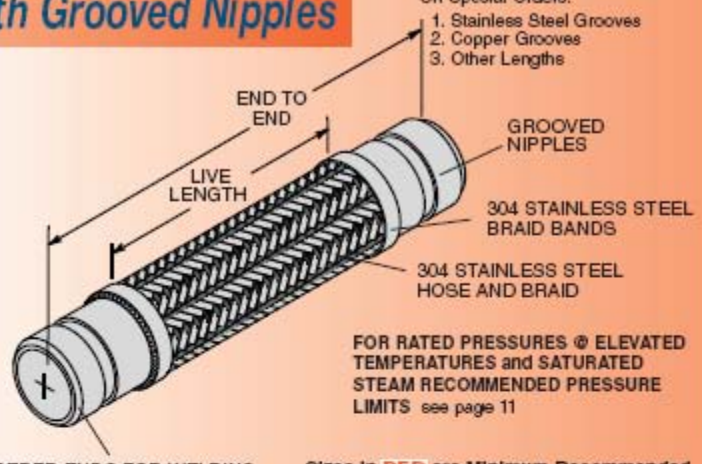

Sizes in RED are Minimum Recommended Lengths at Equipment Connections to Reduce Vibration Transmission. See discussion on pages 3 - 6.

Safety Factor Is 4X Rated Pressure. Max. Vacuum— 30" Hg 762mm Hg

STOCK SIZES and LENGTHS

GN DIMENSIONS AND PRESSURE RATINGS (British Units)

Type	Pipe Size & End to End (in)	Live Length (in)	Corru-gations per foot	Maximum Permanent Lateral Offset**(in)	Rated Pressure @70°F (psi)
GN	2 X 14	8	58	1/4	360
GN	2 X 24	18	58	21/4	360
GN	21/2 X 14	8	48	1/4	290
GN	21/2 X 24	18	48	2	290
GN	3 X 14	8	46	1/4	280
GN	3 X 36	30	46	33/4	280
GN	4 X 18	10	32	1/4	225
GN	4 X 36	28	32	31/4	225
GN	5 X 20	12	29	1/4	200
GN	5 X 36	28	29	23/4	200
GN	6 X 22	14	25	1/4	200
GN	6 X 36	28	25	21/2	200
GN	8 X 24	16	23	1/4	200
GN	8 X 36	28	23	21/4	200
GN	10 X 28	18	21	1/4	170
GN	10 X 36	26	21	11/4	170
GN	12 X 30	20	20	1/4	170[1]
GN	12 X 36	26	20	7/8	170[1]

GN DIMENSIONS AND PRESSURE RATINGS (Metric Units)

Type	Pipe Size & End to End (mm)	Live Length (mm)	Corru-gations per meter	Maximum Permanent Lateral Offset**(mm)	Rated Pressure @21°C (kg/cm²)
GN	50 X 356	203	190	6	25
GN	50 X 610	457	190	57	25
GN	65 X 356	203	157	6	20
GN	65 X 610	457	157	51	20
GN	75 X 356	203	151	6	19
GN	75 X 900	762	151	95	19
GN	100 X 457	254	105	6	15
GN	100 X 914	711	105	83	15
GN	125 X 508	305	95	6	14
GN	125 X 914	711	95	70	14
GN	150 X 559	356	82	6	14
GN	150 X 914	711	82	54	14
GN	200 X 610	406	75	6	14
GN	200 X 914	711	75	64	14
GN	250 X 711	457	69	6	12
GN	250 X 914	660	69	32	12
GN	300 X 762	508	66	6	11[1]
GN	300 X 914	660	66	22	11[1]

**Lateral Offset one side of centerline and normal machinery vibration. If intermittent in both directions, reduce by 50%.

[1]Size 12" 300mm has double braid.

CPSB– *Braided Bronze Hose with Copper Sweat Ends*

ALL SERVICES EXCEPT REFRIGERANT

Copper Lines have virtually no stiffness or mass. We are recommending our longest standard lengths primarily for offset, not vibration reduction. See spec on page 6.

STOCK SIZES and LENGTHS

CPSB DIMENSIONS AND PRESSURE RATINGS (British Units)

Type	Tubing[tt] Size & End to End[t] (in)	Live Length (in)	Corru-gations per foot	Maximum Permanent Lateral Offset**(in)	Rated Pressure @70°F (psi)
CPSB	1/2 X 61/2*	23/4	92	1/8	175
CPSB	1/2 X 12	81/4	92	11/4	175
CPSB	1/2 X 18	141/4	92	21/2	175
CPSB	3/4 X 7*	23/4	80	1/8	175
CPSB	3/4 X 12	73/4	80	1	175
CPSB	3/4 X 18	133/4	80	21/4	175
CPSB	1 X 8*	33/8	72	1/8	175
CPSB	1 X 12	73/8	72	3/4	175
CPSB	1 X 18	133/8	72	2	175
CPSB	11/4 X 81/2*	33/4	67	1/8	175
CPSB	11/4 X 12	71/4	67	3/4	175
CPSB	11/4 X 18	131/4	67	13/4	175
CPSB	11/2 X 9*	4	63	1/8	175
CPSB	11/2 X 12	7	63	5/8	175
CPSB	11/2 X 18	13	63	11/2	175
CPSB	2 X 12	61/2	58	1/4	175
CPSB	2 X 18	121/2	58	13/8	175
CPSB	21/2 X 12*	43/4	48	1/8	175
CPSB	21/2 X 18	103/4	48	11/4	175
CPSB	3 X 12*	41/2	46	1/8	175
CPSB	3 X 18	101/2	46	1	175
CPSB	4 X 18*	91/2	32	1/2	175[1]
CPSB	4 X 24	151/2	32	3/4	175[1]

CPSB DIMENSIONS AND PRESSURE RATINGS (Metric Units)

Type	Tubing[tt] Size & End to End[t] (mm)	Live Length (mm)	Corru-gations per meter	Maximum Permanent Lateral Offset**(mm)	Rated Pressure @21°C (kg/cm²)
CPSB	15 X 165*	70	302	3	12
CPSB	15 X 305	210	302	32	12
CPSB	15 X 457	362	302	63	12
CPSB	20 X 178*	70	262	3	12
CPSB	20 X 305	197	262	25	12
CPSB	20 X 457	349	262	57	12
CPSB	25 X 203*	86	236	3	12
CPSB	25 X 305	187	236	19	12
CPSB	25 X 457	340	236	50	12
CPSB	32 X 216*	95	220	3	12
CPSB	32 X 305	184	220	19	12
CPSB	32 X 457	337	220	43	12
CPSB	40 X 229*	102	207	3	12
CPSB	40 X 305	178	207	15	12
CPSB	40 X 457	330	207	38	12
CPSB	50 X 305	165	190	6	12
CPSB	50 X 457	318	190	34	12
CPSB	65 X 305*	121	157	3	12
CPSB	65 X 457	300	157	32	12
CPSB	80 X 305*	114	151	3	12
CPSB	80 X 457	267	151	25	12
CPSB	100 X 457*	241	105	13	12[1]
CPSB	100 X 610	394	105	19	12[1]

FOR RATED PRESSURES @ ELEVATED TEMPERATURES see page 13

NOT SUITABLE FOR STEAM.

When using CPSB products in stainless steel water systems, dielectric unions must be used on each end to prevent leakage from galvanic action.

[tt]Female hose fits over copper tubing, e.g. 1/2 x 61/2 15 x 163mm fits over 1/2" 15mm tubing.

*Industry Pump Connector Lengths are not recommended, but supplied on demand.

**Lateral Offset one side of centerline and normal machinery vibration. If intermittent in both directions, reduce by 50%.

[t]End to End Tolerances: Sizes 1/2" - 4" 15 - 100mm, ±1/4" 6mm

[1]Size 4" 100mm has double braid.

Consult factory with full location description as well as service conditions for higher pressure or temperature applications.

Rated Pressure @ Elevated Temperatures for CPSB

RATED PRESSURES @ ELEVATED TEMPERATURES

Hose Size	150°F 66°C Factor 0.85 (psi)	(kg/cm²)	300°F 149°C Factor 0.78 (psi)	(kg/cm²)	400°F 204°C Factor 0.50 (psi)	(kg/cm²)
All Sizes	150	10	135	9	90	6

INSTALLATION INSTRUCTIONS for CPSB and ULCPS

1. Thoroughly clean male and female ends using steel wool and steel brushes.
2. Apply flux.
3. Wrap base of copper fitting on connector and 2" 50mm of the braid with a wet cloth to prevent overheating during soldering.
4. Direct the torch away from the base of the copper fitting and braided section. Avoid contact of the flame with the base of the copper fitting and braid. Heat end of copper fitting for proper flow of silver solder. Silver solder flows at approximately 430°F 221°C
5. Do not use brazing rod or other higher temperature techniques. Overheating will cause leaks.
6. Remove wet rag and remove all soldering flux immediately after installation. Chlorides will cause premature failure of joint.

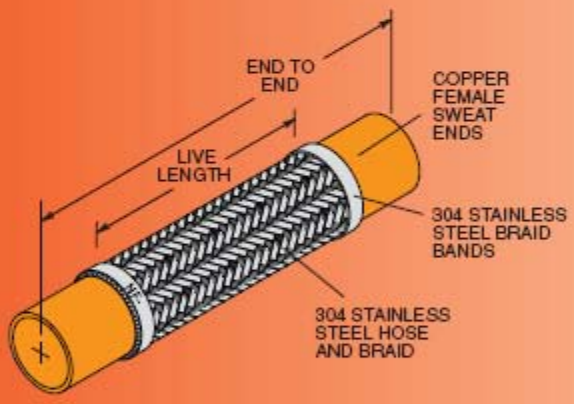

ULCPS– *Braided SS Hose with Copper Sweat Ends U. L. Approved for Refrigerant Services*

Safety Factor Is 5X Rated Pressure.
Max. Vacuum— 30" Hg 762mm Hg

Lengths are industry standard always ordered for this service.

STOCK SIZES and LENGTHS

ULCPS DIMENSIONS AND PRESSURE RATINGS (British Units)

Stamped Code	Size & End to End† (in)	Fits Over Tubing Size	Tubing OD (In)	Live Length (in)	Maximum Permanent Lateral Offset*(in)	Rated Pressure @70°F (psi)
NF1	1/4 X 8 1/2	1/4	3/8	6	1/8	500
NF2	3/8 X 9	3/8	1/2	6 1/4	1/8	500
NF3	1/2 X 9 3/4	1/2	5/8	6 5/8	1/8	500
NF4	5/8 X 10 1/2	5/8	3/4	6 3/4	1/8	500
NF5	3/4 X 12	3/4	7/8	7 1/2	1/8	500
NF6	1 X 13	1	1 1/8	7 7/8	1/8	500
NF7	1 1/4 X 15 1/2	1 1/4	1 3/8	9 3/4	1/8	500
NF8	1 1/2 X 17	1 1/2	1 5/8	10 1/2	1/8	500
NF9	2 X 20 1/2	2	2 1/8	13 1/4	1/8	390
NF10	2 1/2 X 24 1/4	2 1/2	2 5/8	15 1/2	1/8	340
NF11	3 X 27	3	3 1/8	17	1/8	300
NF12	4 X 33	4	4 1/8	21	1/8	250

ULCPS DIMENSIONS AND PRESSURE RATINGS (Metric Units)

Stamped Code	Size & End to End† (mm)	Fits Over Tubing Size	Tubing OD (mm)	Live Length (mm)	Maximum Permanent Lateral Offset*(mm)	Rated Pressure @21°C (kg/cm²)
NF1	6 X 216	6	10	152	3	35
NF2	10 X 229	10	15	159	3	35
NF3	15 X 248	15	17	168	3	35
NF4	17 X 267	17	19	171	3	35
NF5	20 X 305	20	22	191	3	35
NF6	25 X 330	25	28	200	3	35
NF7	32 X 394	32	35	248	3	35
NF8	40 X 432	40	41	267	3	35
NF9	50 X 521	50	54	337	3	27
NF10	65 X 616	65	68	394	3	23
NF11	80 X 686	80	78	432	3	21
NF12	100 X 838	100	105	533	3	17

*Lateral Offset one side of centerline and normal machinery vibration. If intermittent in both directions, reduce by 50%.
†End to End Tolerances: All Sizes, ±1/4" 6mm

CSA Series of Braided Hose

Everyone is concerned when installing flexible hose in flammable gas or liquid lines because of the risk of both asphyxiation and fire. Approved by the CSA, the successor to the American Gas Association, and complying with UL 536 provides that assurance. Tests include vibration 300 hours at 15 Hz, 90° bends at rated pressure @ 10 cpm for 20,000 cycles, elongation and tension, 450°F 232°C for 100 hours as well as flame resistance. All of our standard hoses 1/2" through 4" diameter passed and can be used in straight, looped or Vee configurations. However, in addition to the general UL approval, all specific hoses must be rechecked with an approved thread gauge, if threaded, and retested to 50% above rated pressure using water or rated pressure using air. It must be clearly identified as a Mason product and tagged with maximum pressure rating and minimum bend radius.

CSAMN– Braided Hose with Threaded Nipples
CSAWN– Braided Hose with Weld Nipples

US

These assemblies have been "CSA" approved for use on gas pipelines. "CSA" is the current certification agency for gas industry products, assuming the authority formerly associated with the American Gas Association (AGA).

Our Certification Report is #230720-1764990. This Certification meets all requirements of ANSI/UL #536-1997 Standards for Flexible Metal Hose.

CSAMN BRAIDED HOSE with THREADED NIPPLES

CARBON STEEL NPT NIPPLES Standard
On Special Orders:
1. Stainless Steel Nipples
2. Other Threads
3. Other Lengths

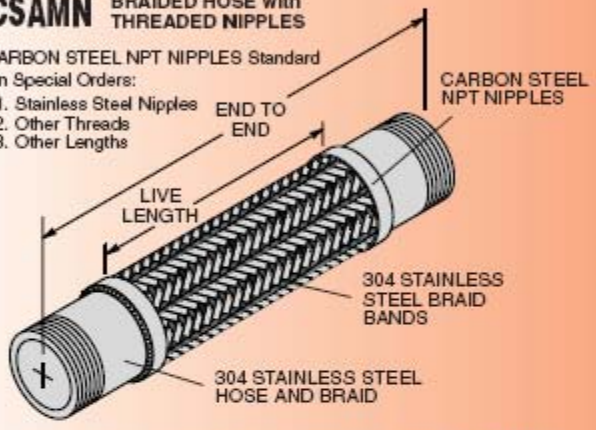

Select Lengths Based on Maximum Anticipated Offset.

CSAWN BRAIDED HOSE with WELD NIPPLES

CARBON STEEL NPT NIPPLES Standard
On Special Orders:
1. Stainless Steel Nipples
2. Other Lengths

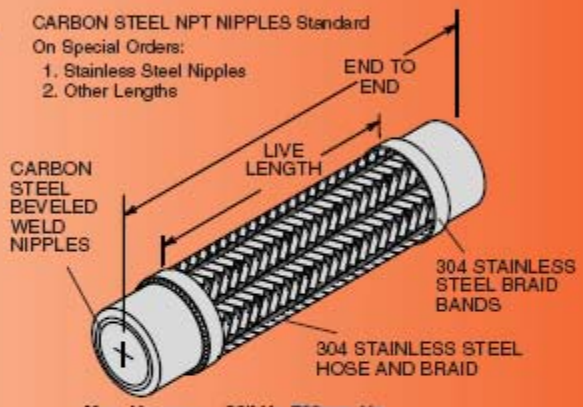

Max. Vacuum— 30" Hg 762mm Hg

STOCK SIZES and LENGTHS

CSAMN & CSAWN DIMENSIONS AND PRESSURE RATINGS (British Units)

Pipe Size (in)	MN End to End† (in)	WN End to End† (in)	Live Length (in)	Corru-gations per foot	Maximum Permanent Lateral Offset* (in)	Rated Pressure @70°F (psi)	Min Burst Pressure (psi)	Safety Factor
1/2	12	11	8 1/4	112	1 1/4	175	4300	25
1/2	18	17	14 1/4	112	2 1/2	175	4300	25
1/2	24	23	20 1/4	112	3 1/2	175	4300	25
3/4	12	10 1/2	8 1/4	90	1	175	3168	18
3/4	18	16 1/2	14 1/4	90	2 1/4	175	3168	18
3/4	24	22 1/2	20 1/4	90	3 1/4	175	3168	18
1	12	10	7 3/4	56	3/4	175	3132	18
1	18	16	13 3/4	56	2	175	3132	18
1	24	22	19 3/4	56	3	175	3132	18
1 1/4	12	10	6 3/4	52	5/8	175	2656	15
1 1/4	18	16	12 3/4	52	1 3/4	175	2656	15
1 1/4	24	22	18 3/4	52	2 3/4	175	2656	15
1 1/2	12	10	6 3/4	46	1/2	175	2284	13
1 1/2	18	16	12 3/4	46	1 1/2	175	2284	13
1 1/2	24	22	18 3/4	46	2 1/2	175	2284	13
2	12	10	6	67	1/4	175	2120	12
2	18	16	12	67	1 3/8	175	2120	12
2	24	22	18	67	2 3/8	175	2120	12
2 1/2	18	15 1/2	11	55	1 1/4	175	1724	10
2 1/2	24	21 1/2	17	55	2	175	1724	10
3	18	15 1/2	11	29	1	175	1564	9
3	24	21 1/2	17	29	1 3/4	175	1564	9
3	36	33 1/2	29	29	3 3/4	175	1564	9
4	18	15 1/2	11	28	1/2	175	1160	7
4	24	21 1/2	17	28	3/4	175	1160	7
4	36	33 1/2	29	28	3 1/4	175	1160	7

STOCK SIZES and LENGTHS

CSAMN & CSAWN DIMENSIONS AND PRESSURE RATINGS (Metric Units)

Pipe Size (mm)	MN End to End† (mm)	WN End to End† (mm)	Live Length (mm)	Corru-gations per meter	Maximum Permanent Lateral Offset* (mm)	Rated Pressure @21°C (kg/cm²)	Min Burst Pressure (kg/cm²)	Safety Factor
15	305	279	210	367	32	12	302	25
15	457	432	362	367	63	12	302	25
15	610	584	514	367	88	12	302	25
20	305	267	210	295	25	12	222	18
20	457	419	362	295	57	12	222	18
20	610	572	514	295	82	12	222	18
25	305	254	197	184	19	12	220	18
25	457	406	349	184	50	12	220	18
25	610	559	502	184	76	12	220	18
32	305	254	171	171	15	12	186	15
32	457	406	324	171	43	12	186	15
32	610	559	610	171	69	12	186	15
40	305	254	171	151	12	12	160	13
40	457	406	324	151	38	12	160	13
40	610	559	610	151	63	12	160	13
50	305	254	152	220	6	12	149	12
50	457	406	305	220	34	12	149	12
50	610	559	457	220	60	12	149	12
65	457	394	279	180	32	12	121	10
65	610	546	432	180	50	12	121	10
80	457	394	279	95	25	12	109	9
80	610	546	432	95	43	12	109	9
80	914	851	737	95	95	12	109	9
100	457	394	279	92	12	12	81	7
100	610	546	432	92	19	12	81	7
100	914	851	737	92	82	12	81	7

*Lateral Offset one side of centerline and normal machinery vibration. If intermittent in both directions, reduce by 50%.

†End to End Tolerance: Sizes 1/2" - 4" 50 - 100mm, ±1/4" 6mm

CSAFFL– *Braided SS Hose with Fixed and Floating Flanges*

CARBON STEEL FIXED AND FLOATING FLANGES ASA-150 Standard

On Special Orders:

1. Stainless Steel Flanges
2. Other Drillings
3. Other Lengths

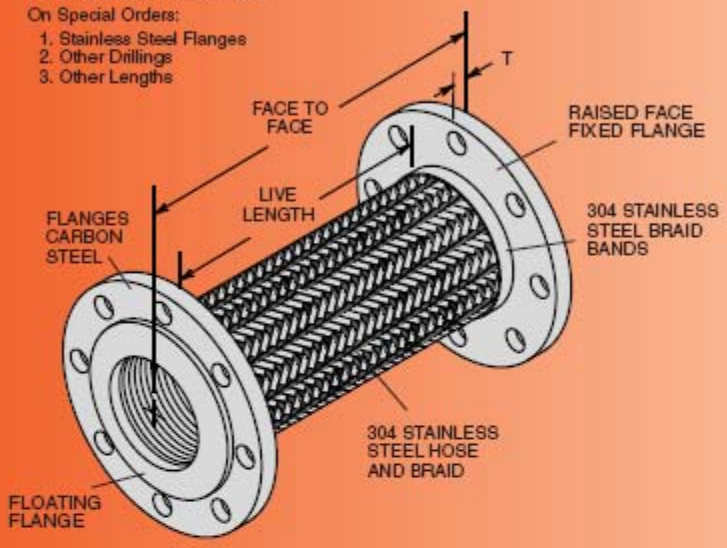

These assemblies have been "CSA" approved for use on gas pipelines. "CSA" is the current certification agency for gas industry products, assuming the authority formerly associated with the American Gas Association (AGA).

Our Certification Report is #230720-1764990. This Certification meets all requirements of ANSI/UL #536-1997 Standards for Flexible Metal Hose.

CARBON STEEL PLATE FLANGE THICKNESS

Pipe Size (in)	(mm)	Flange Thickness T (in)	(mm)
1 1/2 thru 4	40 thru 100	5/8	16

Select Lengths Based on Maximum Anticipated Offset.

Max. Vacuum— 30" Hg 762mm Hg

STOCK SIZES and LENGTHS

CSAFFL DIMENSIONS AND PRESSURE RATINGS (British Units)

Pipe Size & Face to Face† (in)	Live Length (in)	Corru-gations per foot	Maximum Permanent Lateral Offset* (in)	Rated Pressure @70°F (psi)	Min Burst Pressure (psi)	Safety Factor
1 1/2 X 12	9 7/8	46	7/8	175	2284	13
1 1/2 X 18	15 7/8	46	2	175	2284	13
1 1/2 X 24	21 7/8	46	2 3/4	175	2284	13
2 X 12	9 1/8	67	3/4	175	2120	12
2 X 18	15 1/8	67	1 3/4	175	2120	12
2 X 24	21 1/8	67	2 1/2	175	2120	12
2 1/2 X 12	9 1/8	55	5/8	175	1724	10
2 1/2 X 18	15 1/8	55	1 1/2	175	1724	10
2 1/2 X 24	21 1/8	55	2 1/4	175	1724	10
3 X 12	9 1/8	30	1/2	175	1564	9
3 X 18	15 1/8	30	1 1/4	175	1564	9
3 X 24	21 1/8	30	2	175	1564	9
3 X 36	33 1/8	30	4	175	1564	9
4 X 12	9 1/8	29	3/8	175	1160	7
4 X 18	15 1/8	29	3/4	175	1160	7
4 X 24	21 1/8	29	1 3/4	175	1160	7
4 X 36	33 1/8	29	3 1/2	175	1160	7

CSAFFL DIMENSIONS AND PRESSURE RATINGS (Metric Units)

Pipe Size & Face to Face† (mm)	Live Length (mm)	Corru-gations per meter	Maximum Permanent Lateral Offset* (mm)	Rated Pressure @21°C (kg/cm²)	Min Burst Pressure (kg/cm²)	Safety Factor
40 X 305	251	207	22	12	160	13
40 X 457	403	207	50	12	160	13
40 X 610	556	207	70	12	160	13
50 X 305	232	190	19	12	149	12
50 X 457	384	190	44	12	149	12
50 X 610	537	190	64	12	149	12
65 X 305	232	157	16	12	121	10
65 X 457	384	157	38	12	121	10
65 X 610	537	157	57	12	121	10
80 X 305	232	151	13	12	109	9
80 X 457	384	151	32	12	109	9
80 X 610	537	151	50	12	109	9
80 X 914	841	151	100	12	109	9
100 X 305	232	105	10	12	81	7
100 X 457	384	105	19	12	81	7
100 X 610	537	105	44	12	81	7
100 X 914	841	105	89	12	81	7

*Lateral Offset one side of centerline and normal machinery vibration. If intermittent in both directions, reduce by 50%.

†Face to Face Tolerances: Sizes 1 1/2" - 4" 40 - 100mm, ±1/4" 6mm.

CSACPS– *Braided Hose with Copper Sweat Ends*

GAS SERVICE ONLY—

See ULCPS page 13 for Refrigerants

These assemblies have been "CSA" approved for use on gas pipelines. "CSA" is the current certification agency for gas industry products, assuming the authority formerly associated with the American Gas Association (AGA).

Our Certification Report is #230720-1764990. This Certification meets all requirements of ANSI/UL #536-1997 Standards for Flexible Metal Hose.

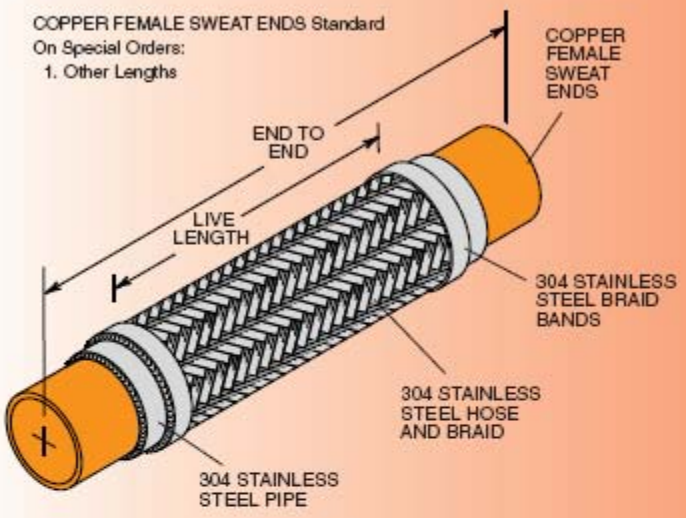

Max. Vacuum— 30" Hg 762mm Hg

Select Lengths Based on Maximum Anticipated Offset.

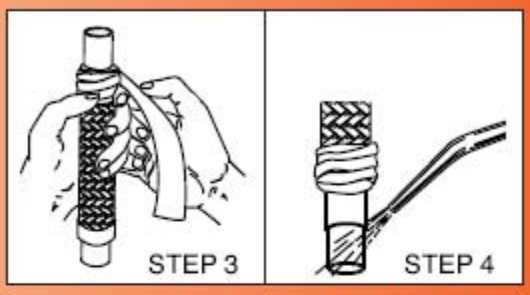

INSTALLATION INSTRUCTIONS for CSACPS

1. Thoroughly clean male and female ends using steel wool and steel brushes.
2. Apply flux.
3. Wrap base of copper fitting on connector and 2" (50mm) of the braid with a wet cloth to prevent overheating during soldering.
4. Direct the torch away from the base of the copper fitting and braided section. Avoid contact of the flame with the base of the copper fitting and braid. Heat end of copper fitting for proper flow of silver solder. Silver solder flows at approximately 430°F (221°C).
5. Do not use brazing rod or other higher temperature techniques. Overheating will cause leaks.
6. Remove wet rag and remove all soldering flux immediately after installation. Chlorides will cause premature failure of joint.

STOCK SIZES and LENGTHS

CSACPS DIMENSIONS AND PRESSURE RATINGS (British Units)

Tubing** Size & End to End† (in)	Live Length (in)	Corru-gations per foot	Maximum Permanent Lateral Offset*(in)	Rated Pressure @70°F (psi)	Min Burst Pressure (psi)	Safety Factor
1/2 X 12	8 3/4	112	1 1/4	175	2880	16
1/2 X 18	14 3/4	112	2 1/2	175	2880	16
3/4 X 12	8 1/4	90	1	175	2320	13
3/4 X 18	14 1/4	90	2 1/4	175	2320	13
1 X 12	8	56	3/4	175	1960	11
1 X 18	14	56	2	175	1960	11
1 1/4 X 12	8	52	3/4	175	1740	10
1 1/4 X 18	14	52	1 3/4	175	1740	10
1 1/2 X 12	7 3/4	46	5/8	175	1620	9
1 1/2 X 18	13 3/4	46	1 1/2	175	1620	9
2 X 12	6 1/2	67	1/4	175	1440	8
2 X 18	12 1/2	67	1 3/8	175	1440	8
2 1/2 X 18	12	55	1 1/4	175	1160	6
3 X 18	11 1/2	29	1	175	1120	6
4 X 18	10	28	1/2	175	920	5
4 X 24	16	28	3/4	175	920	5

CSACPS DIMENSIONS AND PRESSURE RATINGS (Metric Units)

Tubing** Size & End to End† (mm)	Live Length (mm)	Corru-gations per meter	Maximum Permanent Lateral Offset*(mm)	Rated Pressure @21°C (kg/cm²)	Min Burst Pressure (kg/cm²)	Safety Factor
15 X 305	222	302	32	12	202	16
15 X 457	375	302	63	12	202	16
20 X 305	210	262	25	12	163	13
20 X 457	362	262	57	12	163	13
25 X 305	203	236	19	12	137	11
25 X 457	356	236	50	12	137	11
32 X 305	203	220	19	12	122	10
32 X 457	356	220	43	12	122	10
40 X 305	197	207	15	12	113	9
40 X 457	349	207	38	12	113	9
50 X 305	165	190	6	12	101	8
50 X 457	318	190	34	12	101	8
65 X 457	305	157	32	12	81	6
80 X 457	292	151	25	12	78	6
100 X 457	254	105	12	12	64	5
100 X 610	406	105	19	12	64	5

*Lateral Offset one side of centerline and normal machinery vibration. If intermittent in both directions, reduce by 50%.

†End to End Tolerances: Sizes 1/2" - 4" 50 - 100mm, ±1/4" 6mm

**Female hose fits over copper tubing, e.g. 1/2 x 61/2 15 x 163mm fits over 1/2" 15mm tubing.

ADAM
NOISE & VIBRATION CONTROL

ADAM Sp. z o.o.
NOISE & VIBRATION CONTROL

Morska 9A
PL 84-230 Rumia
tel. / fax +48 58 671 38 35

biuro@adam.com.pl
adam.com.pl

Oc906
6/09

Printed in U.S.A.